KV-K21MN11/K25MN11

RM-845T RM-845P

KV-K29MH11/K29MN11

RM-845 RM-845P

SERVICE MANUAL

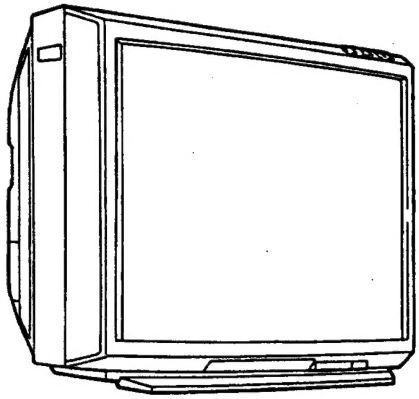

ME Model

KV-K21MN11
Chassis No. SCC-G37B-A
KV-K25MN11
Chassis No. SCC-G37A-A

HK Model

KV-K29MH11
Chassis No. SCC-G43A-A

GE Model

KV-K29MN11
Chassis No. SCC-G44A-A

EX Model

KV-K21MN11
Chassis No. SCC-G50A-A
KV-K25MN11
Chassis No. SCC-G50B-A

G3F CHASSIS

MODELS OF THE SAME SERIES	
KV-K21MN11/K25MN11	
KV-K29MH11/K29MN11	

MICROFILM

TRINITRON® COLOR TV

SONY®

SPECIFICATIONS

Specifications	KV-K21MN11	KV-K25MN11	KV-K29MN11 KV-K29MH11	Note
Power requirements	110-240 V AC, 50/60 Hz			
Power consumption (W)	135	165	171	
Television system	B/G, I, D/K, M			
Color system	PAL, PAL 60, SECAM, NTSC4.43, NTSC3.58			
Stereo system	NICAM Stereo B/G, I ; A2 Stereo (Germany) B/G			
Channel coverage				
B/G	VHF : E2 to E12 / UHF : E21 to E69 / CATV : S01 to S03, S1 to S41			
I	UHF : B21 to B68			
D/K	VHF : R1 to R12 / UHF : R21 to R60			
M	VHF : A2 to A13 / UHF : A14 to A79 A-8 to E, G to W+25, W+27 to W+84			
Antenna	75-ohm external antenna terminal for VHF/UHF			
Audio output (speaker)	7W × 2	13W × 2	13W × 2	
Number of terminal				
Video	Input : 3 Output : 1			
Audio	Input : 3 Output : 1			
S1-Video	Input : 2			Y : 1 Vp-p, 75 ohms, unbalanced, sync negative C : 0.286 Vp-p, 75 ohms
Picture tube	Super Trinitron			
Tube size (inch)	21	25	29	Measured diagonally
Screen size (cm)	54	60	68	Measured diagonally
Dimensions (w/h/d, mm)	550 × 455 × 473	619 × 514 × 500	694 × 578 × 527	
Mass (kg)	25.5	37.5	50	
Accessories				
Supplied	Remote commander (1)			
	Size R6 (AA) battery (1)			
Optional		TV stand SU-K1G		
	Magic commander RM-829, RM-848			

Design and specifications are subject to change without notice.

Sony Corporation Tokyo, Japan

CAUTION

SHORT CIRCUIT THE ANODE OF THE PICTURE TUBE AND THE ANODE CAP TO THE METAL CHASSIS, CRT SHIELD, OR CARBON PAINTED ON THE CRT, AFTER REMOVING THE ANODE.

SAFETY-RELATED COMPONENT WARNING!!

COMPONENTS IDENTIFIED BY SHADING AND MARK ⚠ ON THE SCHEMATIC DIAGRAMS, EXPLODED VIEWS AND IN THE PARTS LIST ARE CRITICAL TO SAFE OPERATION. REPLACE THESE COMPONENTS WITH SONY PARTS WHOSE PART NUMBERS APPEAR AS SHOWN IN THIS MANUAL OR IN SUPPLEMENTS PUBLISHED BY SONY.

SECTION 1
GENERAL

The operating instructions mentioned here are partial abstracts from the Operating Instruction Manual. The page numbers of the Operating Instruction Manual remain as in the manual.

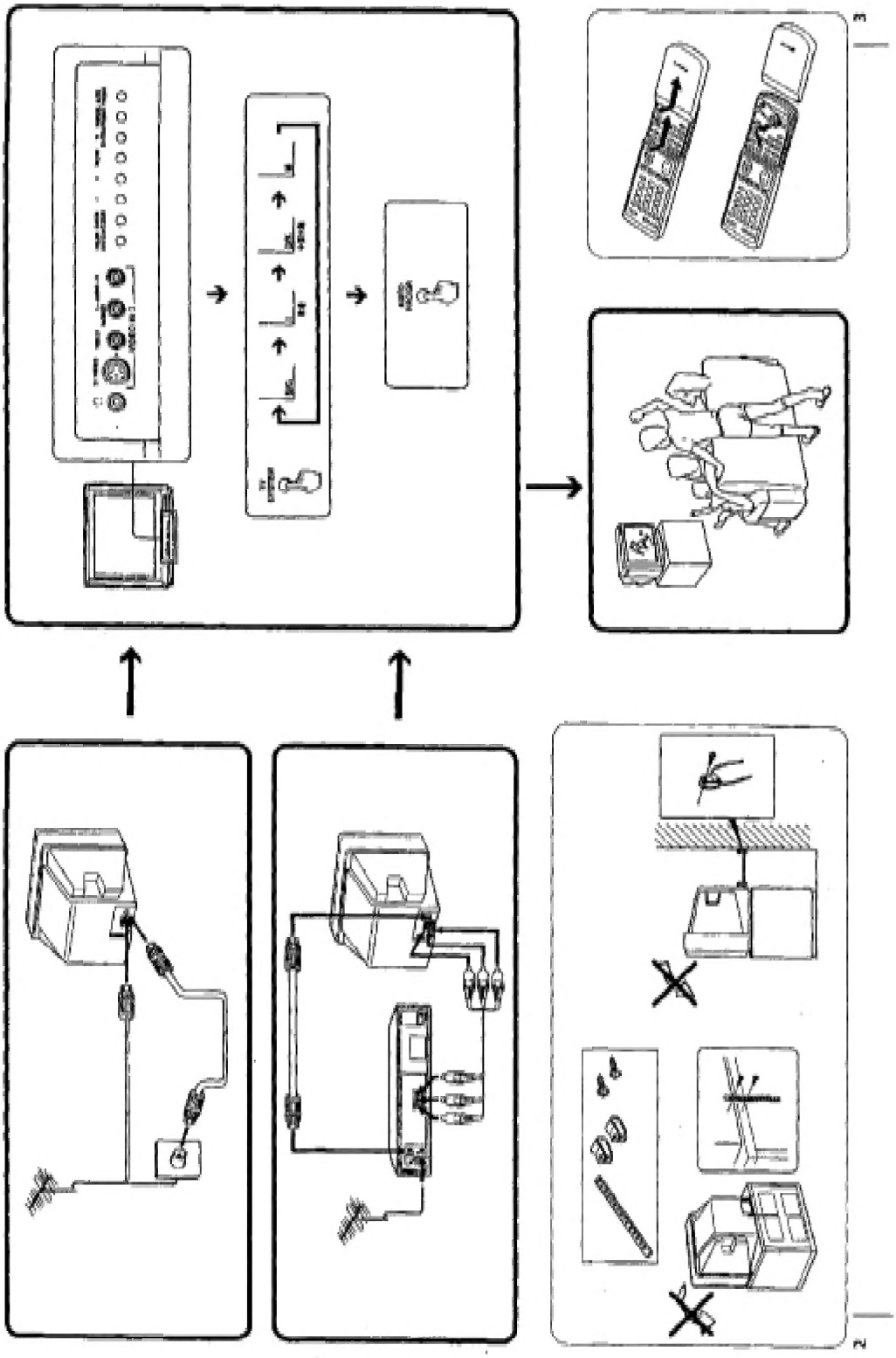

1-1. HOOKING UP

Connecting a VHF antenna or a combination VHF/UHF antenna — 75-ohm coaxial cable (round)

Attach an optional IEC antenna connector to the 75-ohm coaxial cable.
Plug the connector into the T (antenna) socket at the rear of the TV.

Hooking up to optional equipment

You can connect optional audio/video equipment to this TV such as a VCR, multi disc player, camcorder, headphones, or stereo system.

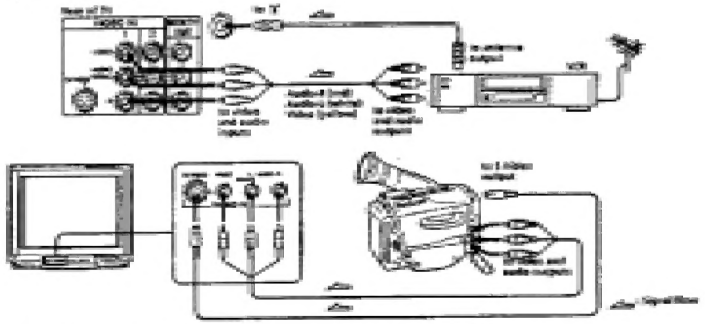

When connecting a monaural VCR
Connect the yellow plug to VIDEO and the black plug to AUDIO-L (mono).

If both S1-Video and video signals are input
The S1-Video input signal is selected. To view a video signal, disconnect the S1-Video connection.

Note on the S1-Video signal
When inputting the S1-Video signal through the VIDEO IN 1 or VIDEO IN 2 jack, set wide mode to OFF if you do not want to display the picture in wide mode (see page 13).

Note on the video input
When no signal is input, the screen becomes blue.

1-2. PRESETTING CHANNELS

You can preset TV channels easily by storing all the receivable channels automatically. You can also preset channels manually or disable program positions.

Presetting channels automatically

You can preset up to 100 TV channels in numerical sequence from program position 1.

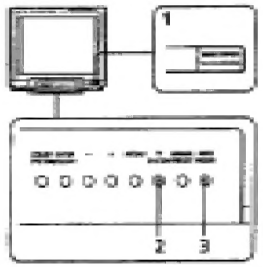

1 **Press MAIN POWER.**

When the TV is in standby mode after pressing MAIN POWER, press POWER on the TV or remote commander.

2 **Press TV SYSTEM to select your local TV system.**

3 **Press AUTO PROGR.**

To start presetting channels automatically from the specified program position
1 Press MANUAL PRESET.
2 Press TV SYSTEM to select your local TV system.
3 Press PROGR +/– to select the program position.
4 Press AUTO PROGR.

Presetting channels manually

To change the program position for a channel or to receive a channel with a weak signal, preset the channel manually.
Example: To preset a channel in program position 8

1 **Press MANUAL PRESET.**

2 **Press PROGR +/– until "8" appears.**

3 **Press TV SYSTEM to select your TV system.**

4 **Press + or – until the channel you want appears.**

5 **Press MANUAL PRESET.**

To preset other channels
Repeat steps 1 to 5.

If the TV system is not properly selected
The color of the picture may be poor and/or the sound may be noisy. In this case, select the appropriate TV system.

1 Press PROGR +/– to select the program position.
2 Press TV SYSTEM until the picture and sound become normal.

Note
– The setting of the TV SYSTEM is recognized for each program position.

Disabling program positions

By disabling unused or unwanted program positions, you can skip those position when you press PROGR +/–.
Example: To disable program position 8

1 Press PROGR +/– until "8" appears.

2 Press MANUAL PRESET.

3 Press ENTER (CLEAR) on the TV.
To disable other program positions, repeat steps 1 to 3.

4 Press MANUAL PRESET.

To cancel the skip setting
Preset the channel manually or automatically again.

1-3. CHANGING THE MENU LANGUAGE

If you prefer Chinese to English, you can change the menu language. You can use buttons on both the remote commander and the TV.

1 Press MENU.

2 Press ∆ + or ∇ – to move the cursor (▶) to LANGUAGE.

3 Press ENTER.

4 Press ∆ + or ∇ – to select CHINESE.

5 Press ENTER.

6 Press MENU to return to the normal screen.

1-4. INTRODUCING THE MENU

You can use the on-screen menus to set the picture quality, sound, and other settings. You can use buttons on both the remote commander and the TV to operate the menus.

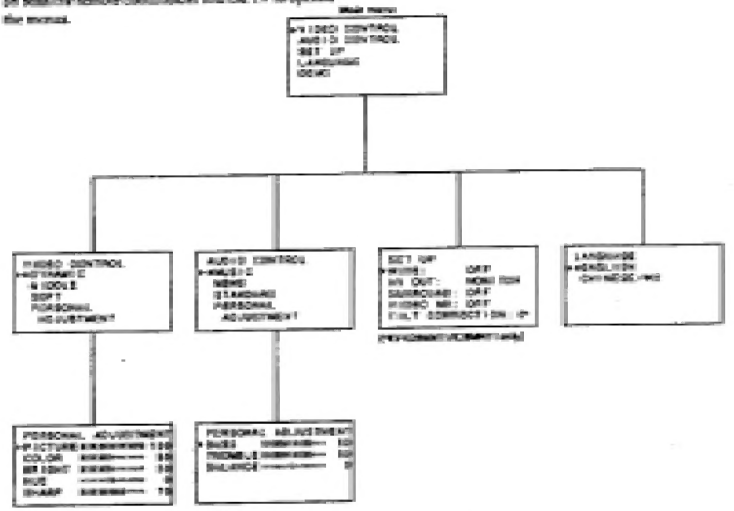

Getting back to the previous menu

Move the cursor (▶) up to the first line of each menu (except the main menu), and press ENTER.

Cancelling the menu screen

Press MENU.

Notes
- When the menu is displayed, you cannot change the channel using the number buttons. Use PROGR +/– instead.
- If more than 90 seconds elapse after you press a button, the menu screen disappears automatically.

1-5. WATCHING THE TV

1 **Press MAIN POWER to turn the TV on.**

When the TV is in standby mode after pressing MAIN POWER, press POWER on the TV or remote commander.

2 **Select the TV channel you want to watch.**

To select a channel directly
Press a number button.

To select a two-digit channel, press "-/--" before the number buttons.
For example: to select channel 25, press "-/--", "2", "5".

To scan through channels
Press PROGR +/– until the channel you want appears.

3 **Press VOL+/– to adjust the volume.**

Switching off the TV

To switch off the TV temporarily, press POWER.

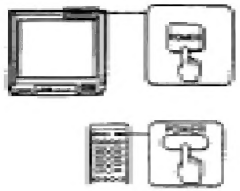

To switch off the TV completely, press MAIN POWER. When the main power is turned off, the STANDBY indicator may light up long.

Watching the video input

Press VIDEO/HOLD.

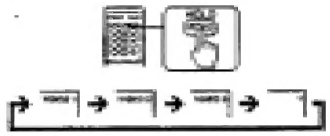

To watch TV, press TV.

Switching back quickly to the previous channel

Press JUMP.

Muting the sound

Press MUTING.

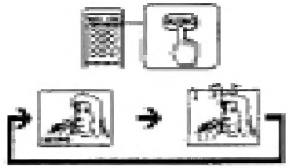

Displaying on-screen information

Press DISPREVEAL.

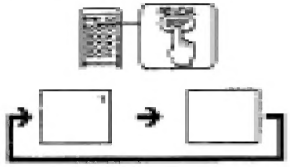

Setting the Sleep Timer

You can set the TV to turn off automatically after the length of time you specify elapses.

Press SLEEP/INDEX.

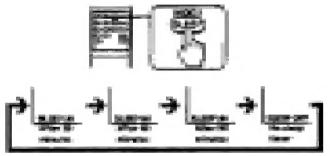

To cancel the Sleep Timer, press SLEEP/INDEX repeatedly until "SLEEP OFF" appears, or turn the TV off.

1-6. SETTING THE REMOTE COMMAND MODE

You can use the supplied remote commander to operate the TV and Sony video equipment, such as a VCR or multi disc player. To operate Sony video equipment, first set the remote command mode for the video equipment you want to use.

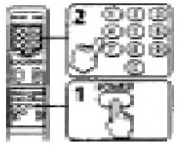

1 **Press and hold the POWER button.**

2 **Press the number buttons that correspond to the remote command mode.**

Mode (Number button)	Remote command mode
0 1	VTR1 (e.g. Betaformat VCR)
0 2	VTR2 (e.g. 8 mm format VCR)
0 3	VTR3 (e.g. VHS format VCR)
0 4	DVD* (multi-disc player)

After setting the remote command mode, you can use the following buttons to operate the video equipment.

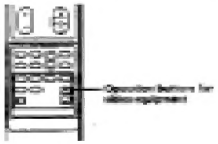

1-7. ADJUSTING THE PICTURE

1 Press MENU.

2 Press △+ or ▽– to move the cursor (▶) to VIDEO CONTROL.

3 Press ENTER.

4 Press △+ or ▽– to select the setting, and press ENTER.

Select	To
DYNAMIC	Display more contrast picture
MEDIUM	Display normal contrast picture
SOFT	Display picture suitable for movie and video games
PERSONAL	Display the picture that is adjusted using ADJUSTMENT
ADJUSTMENT	Make specific adjustments. See "Adjusting the picture precisely."

5 Press MENU to return to the normal screen.

Adjusting the picture precisely

You can adjust the picture quality precisely with the ADJUSTMENT option. The adjusted settings are stored in the PERSONAL option.

1 Press MENU.

2 Press △+ or ▽– to move the cursor (▶) to VIDEO CONTROL, and press ENTER.

3 Press △+ or ▽– to move the cursor (▶) to ADJUSTMENT, and press ENTER.

4 Press △+ or ▽– to move the cursor (▶) to the item you want to adjust, and press ENTER.

5 Press △+ or ▽ to adjust the item, and press ENTER.

Item	Press △+ to	Press ▽– to
PICTURE	Increase picture contrast	Decrease picture contrast
COLOR	Increase color intensity	Decrease color intensity
BRIGHT	Brighten the picture	Darken the picture
HUE	Make skin tones become greenish	Make skin tones become reddish
SHARP	Sharpen the picture	Soften the picture

6 To adjust other items, repeat steps 4 and 5.

7 Press MENU to return to the normal screen.

Note

• You can adjust HUE for NTSC system only.

If the color of the picture is abnormal

When receiving programs through the ℽ terminal. Press TV SYSTEM or COLOR SYSTEM until the color becomes normal.

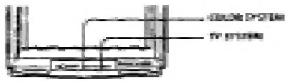

Note

• Normally set COLOR SYSTEM to AUTO.

1-8. ADJUSTING THE SOUND

1 Press MENU.

2 Press △+ or ▽– to move the cursor (▶) to AUDIO CONTROL.

3 Press ENTER.

4 Press △+ or ▽– to select the sound that you want, and press ENTER.

Select	To
MUSIC	Listen to music programs.
NEWS	Listen to news programs. A person's voice can be heard clearly.
STANDARD	Listen to sound other than music or news.
PERSONAL	Listen to the sound that is adjusted using ADJUSTMENT.
ADJUSTMENT	Make specific settings. See "Adjusting the picture precisely."

5 Press MENU to return to the normal screen.

Adjusting the sound precisely

You can adjust the sound precisely with the ADJUSTMENT option. The adjusted settings are stored in the PERSONAL option.

1 **Press MENU.**

2 **Press △+ or ▽– to move the cursor (▶) to AUDIO CONTROL, and press ENTER.**

3 **Press △+ or ▽– to move the cursor (▶) to ADJUSTMENT, and press ENTER.**

4 **Press △+ or ▽– to move the cursor (▶) to the item you want to adjust, and press ENTER.**

5 **Press △+ or ▽– to adjust the item, and press ENTER.**

Item	Press △+ to	Press ▽– to
BASS	Increase the bass sound	Decrease the bass sound
TREBLE	Increase the treble sound	Decrease the treble sound
BALANCE	Increase the volume of left speaker	Increase the volume of right speaker

6 **To adjust other items, repeat steps 4 and 5.**

7 **Press MENU to return to the normal screen.**

If the sound is distorted or noisy
When receiving programs through the 'B' terminal:
Press TV SYSTEM until the sound becomes clear.

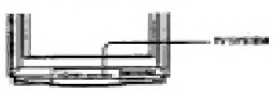

1-9. SELECTING A STEREO OR BILINGUAL PROGRAM

You can enjoy stereo sound or bilingual programs of NICAM and A2 (German) systems. The initial setting is stereo sound.

Press A/B/ENLARGE repeatedly until you receive the sound you want.
The sound changes and the corresponding indicator lights up as follows:

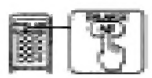

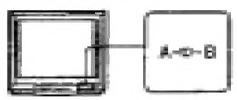

When receiving a NICAM program:

Broadcasting	On-screen display	Selected sound (indicator)
NICAM stereo	NICAM	→ Stereo → Regular (A and B)
NICAM bilingual	NICAM	→ A → B → Regular (A) (B)
NICAM monaural	NICAM	→ Monaural → Regular (A)

When receiving a A2 (German) program:

Broadcasting	On-screen display	Selected sound (indicator)
A2 (German) stereo	STEREO	Stereo (A and B)
A2 (German) bilingual	—	→ A → B (A) (B)

Receiving area for NICAM and A2 (German) programs

System	Receiving area
NICAM	Hong Kong, Singapore, New Zealand, etc.
A2 (German)	Australia, Malaysia, Thailand, etc.

Notes:
- If the signal is very weak, the sound becomes monaural.
- If the stereo sound is noisy, select "regular" or "mono." The sound becomes monaural, however, the noise will be reduced.

1-10. WATCHING TWO PICTURES SIMULTANEOUSLY

■ KV-K25MN11/K29MH11/K29MN11 only

With this function you can display a Picture In Picture (PIP) screen (small picture) within the main picture of a TV program or a video input.

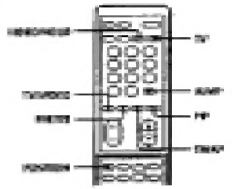

Displaying PIP

Press PIP.

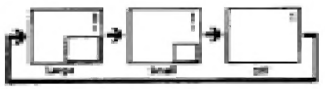

The channels are displayed as follows:
Main screen: green
PIP screen: white

Selecting a TV program or video in the main screen
To select a TV program, press TV and select the channel.
To select a video, press VIDEO/HOLD to select a video input.

Selecting a TV program or video in the PIP screen
To select a TV program, press TV/VIDEO to select TV then select the channel.
To select a video, press VIDEO/HOLD to select a video input.

Note
- You can display different TV programs simultaneously using the VCR's built-in tuner.

Swapping pictures between the main and PIP screens

Press SWAP.

Changing the position of the PIP screen

Press POSITION.

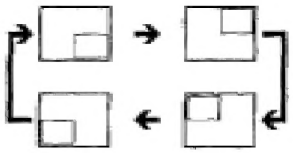

Freezing the PIP screen

Press FREEZE.
To restore the normal picture, press FREEZE again.

Notes

- When you display a VCR picture on the PIP screen at a speed other than normal speed, the picture may be noisy depending on the VCR. The picture can be improved by selecting the smaller size of the PIP screen.
- If you display different color systems (PAL, PAL 60, SECAM, NTSC) on the main screen and the PIP screen, the size of the PIP screen may be different and the PIP picture may be noisy. This is not caused by the malfunction of the TV.

1-11. VIEWING TELETEXT

TV stations broadcast an information service called teletext via a TV channel.
Teletext service allows you to receive various information such as weather forecasts or news at any time you want.

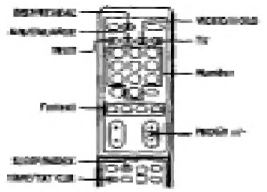

Displaying teletext

1 Select a TV channel which carries the teletext broadcast you want to watch.

2 Press TEXT to display the teletext.
A teletext page is displayed (normally the index page). If there is no teletext broadcast, P100 is displayed at the top left corner of the screen.

To cancel the teletext display, press TV.

Superimposing a teletext page on the TV picture

Press TEXT.
Each time you press TEXT, the screen changes as follows:

Teletext → Teletext and TV → TV

Checking the contents of a teletext service

Press SLEEP/INDEX to display an overview of the teletext contents and page numbers.

Using fastext

This feature allows you to quickly access a teletext page that uses fastext. When a fastext page is broadcast, a color-coded menu appears at the bottom of the screen. The colors of the menu correspond to the RED, GREEN, YELLOW, and CYAN buttons on the remote commander. These color buttons function as the fastext buttons in teletext mode.

Press the color button which corresponds to the color-coded menu.
The page is displayed after a few seconds.

Selecting a teletext page

To input the three-digit page number of the teletext page, press the number buttons.
If you have made a mistake, key in the correct page number again.

To access the next or previous page, press PROG# +/-.

Holding a teletext page

A teletext page may consist of several subpages. You can stop the page scrolling in order to read the text at your own pace.

Press VIDEO/HOLD.
The HOLD symbol "⏸" is displayed at the top left corner of the screen.

To resume normal teletext operation, press TEXT.

Revealing concealed information

Sometimes pages contain concealed information, such as an answer to a quiz. The reveal option lets you disclose the information.

Press DISP/REVEAL.
To conceal the information, press DISP/REVEAL again.

Enlarging the teletext display

Press A/B/EN.LARGE.
Each time you press A/B/EN.LARGE, the teletext display changes as follows:

Enlarge upper half → Enlarge lower half → Normal size

Waiting for a teletext page while watching a TV program

1 Key in the page number of the teletext that you want to refer, then press TIME/TEXT CUR.

2 When the page number is displayed on the screen, press TEXT to switch the teletext on.

1-12. CUSTOMIZING THE TV (SET UP)

Setting wide mode

When receiving the signal conforming to wide mode (S1-Video signal), you can change the size of the picture on the screen.

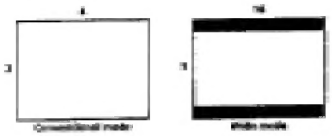

1 Press MENU.

2 Press ⇧+ or ⇩– to select SET UP, and press ENTER.

```
SET UP
▶WIDE:        OFF
 AV OUT:      MONITOR
 SURROUND:    OFF
 VIDEO NR:    OFF
```

3 Press ⇧+ or ⇩– to select WIDE, and press ENTER.

4 Press ⇧+ or ⇩– to select the wide mode to suit the size of the picture you want to display on the TV screen.

Select	To
ON	Display the picture on the screen in wide mode
AUTO	Display the picture on the screen in wide mode automatically when receiving the S1-Video signal through the S1-Video input jack
OFF	Display the picture on the screen in conventional size

Note
- When the picture is in wide mode, the bright lines which are used for adjusting the CRT to optimum level appear at the top of the screen.

Using the AV OUT (advanced rec-out) terminal

You can select the output signal from the MONI/TP OUT jacks at the rear of the TV to the TV signal or the signal of the picture you are watching as a monitor.

1 Press MENU.

2 Press ⇧+ or ⇩– to select SET UP, and press ENTER.

```
SET UP
▶WIDE:        OFF
 AV OUT:      MONITOR
 SURROUND:    OFF
 VIDEO NR:    OFF
```

3 Press ⇧+ or ⇩– to select AV OUT, and press ENTER.

4 Press ⇧+ or ⇩– to select the output signal, and press ENTER.

Select	To
TV	Output the TV signal.
MONITOR	Output the signal of the picture you are watching as a monitor.

Note
- When TV is selected, the output for recording is not fixed. That is, when watching a video in the main screen and a TV program in the PIP screen and recording the TV program, the channel for recording changes if you change the channel in the PIP screen.

Selecting the surround sound

You can enjoy a surround sound effect that is like being in a music hall when receiving stereo signals.

1 Press MENU.

2 Press ⇧+ or ⇩– to select SET UP, and press ENTER.

```
SET UP
▶WIDE:        OFF
 AV OUT:      MONITOR
 SURROUND:    OFF
 VIDEO NR:    OFF
```

3 Press ⇧+ or ⇩– to select SURROUND, and press ENTER.

4 Press ⇧+ or ⇩– to turn the surround sound on or off, and press ENTER.

Select	To
ON	Listen to surround sound that is effective for stereo signals
SPACE	Listen to surround sound that is effective for monaural signals
OFF	Turn off surround sound

Reducing the noise of the picture

You can reduce the noise level of the picture when the TV receives a weak signal or when you play a videotape that is in poor condition.

1 Press MENU.

2 Press ⇧+ or ⇩– to select SET UP, and press ENTER.

```
SET UP
▶WIDE:        OFF
 AV OUT:      MONITOR
 SURROUND:    OFF
 VIDEO NR:    OFF
```

3 Press ⇧+ or ⇩– to select VIDEO NR, and press ENTER.

4 Press ⇧+ or ⇩– to turn the noise reduction on or off, and press ENTER.

Adjusting the tilt of the picture

■ KV-K29MN11/K29MH11 only

You can adjust the tilt of the picture if it is not aligned to the TV screen. This happens when you set the TV in the direction with effect of magnetic fields.

1 Press MENU.

2 Press ⇧+ or ⇩– to select SET UP, and press ENTER.

```
SET UP
▶WIDE:        OFF
 AV OUT:      MONITOR
 SURROUND:    OFF
 VIDEO NR:    OFF
 TILT CORRECTION: 0
```

3 Press ⇧+ or ⇩– to select TILT CORRECTION, and press ENTER.

4 Press ⇧+ or ⇩– to select the most suitable value to align the picture position.

TILT CORRECTION : -3 ← -2 ← -1 ← -0 → +0 → +2 → +3
⇩– ⇧+

1-13. TROUBLESHOOTING

If you have any problem, read the manual again and check the countermeasure for each symptom listed below.
If the problem persists, contact your nearest authorized service center or dealer.

Snowy picture
Noisy sound

➡ Check the antenna.
➡ Check the antenna connection on the TV and on the wall.
➡ Check the TV system setting.

Dotted lines or stripes

➡ They may be caused by local interference (e.g. cars, neon signs, hair dryers, etc.). Adjust the antenna for maximum interference.

Double images or "ghosts"

➡ They may be caused by reflections from nearby mountains or buildings. A highly directional antenna may improve the picture.

Good picture
Noisy sound

➡ Check the TV SYSTEM setting.

No picture
No sound

➡ Press MAIN POWER.
➡ Press POWER.
➡ Check the antenna connection.
➡ Check the VCR connections.

Good picture
No sound

➡ Press VOLUME +.
➡ Press MUTING.
➡ Press A/B/ENLARGE.

No color

➡ Adjust the COLOR level in the VIDEO CONTROL menu's ADJUSTMENT option.
➡ Check the COLOR SYSTEM setting.

SECTION 2
DISASSEMBLY

2-1. REAR COVER REMOVAL (KV-K21MN11 only)

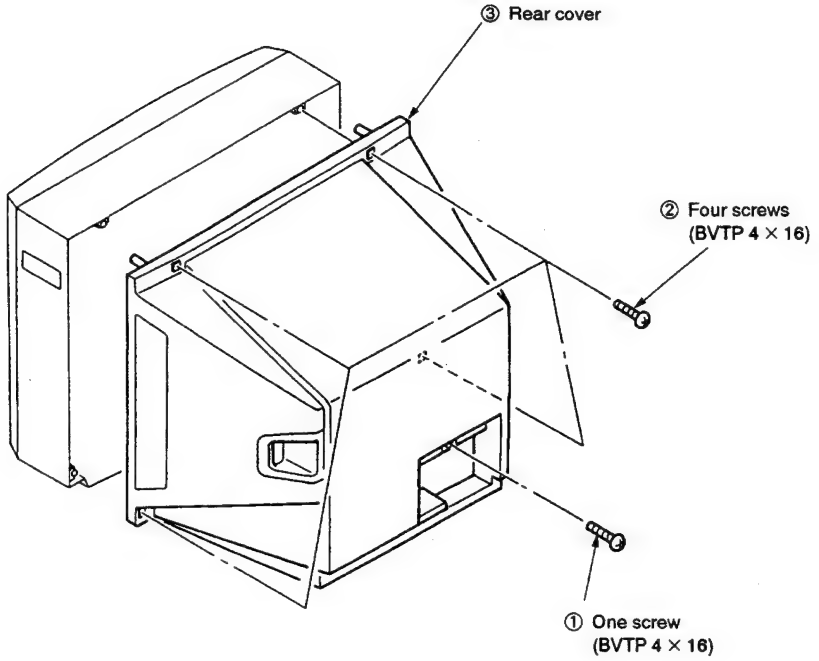

2-1. REAR COVER REMOVAL (KV-K25MN11/K29MN11/K29MH11 only)

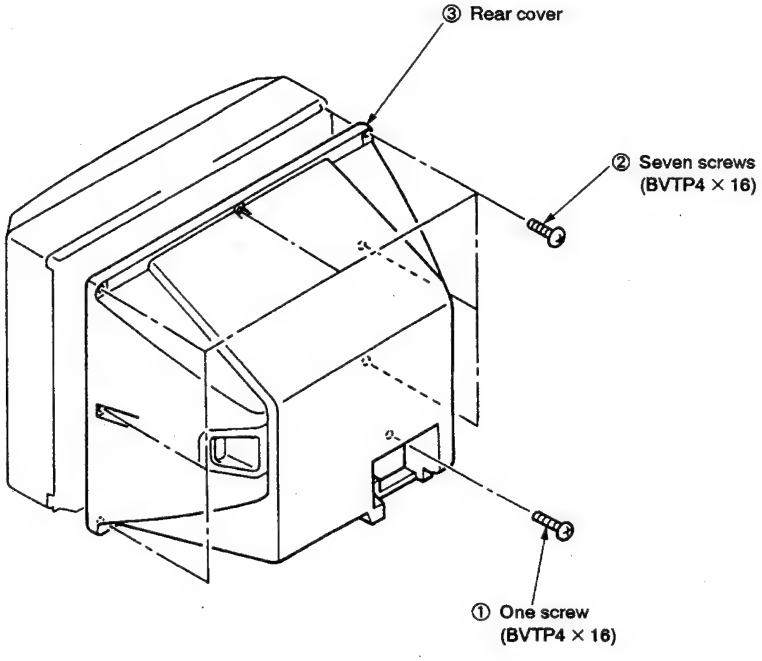

2-2. SWITCH BLOCK REMOVAL

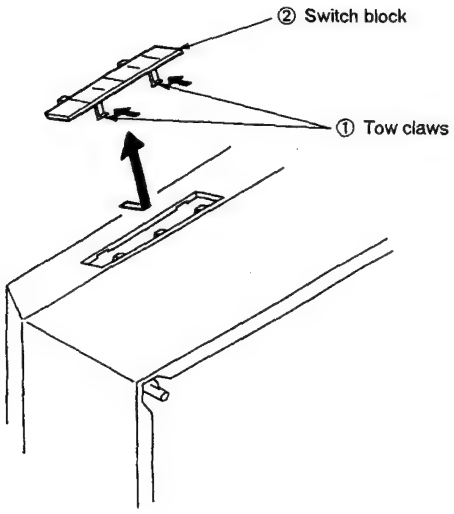

2-3. SPEAKER REMOVAL

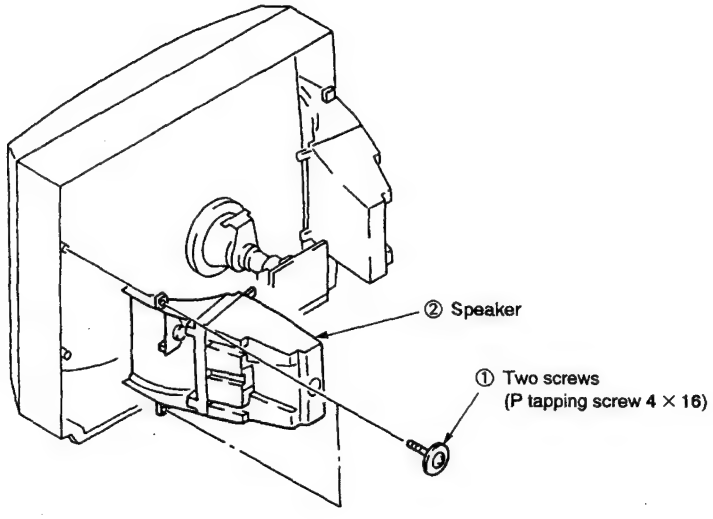

2-4. CHASSIS ASSY REMOVAL

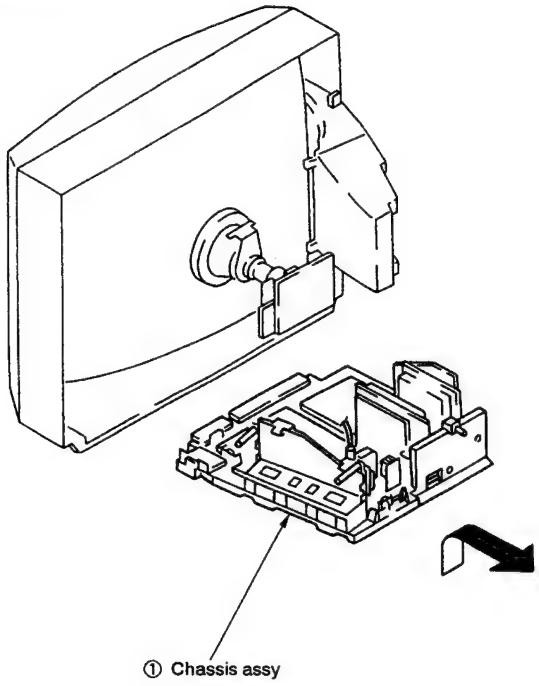

2-5. SERVICE POSITION

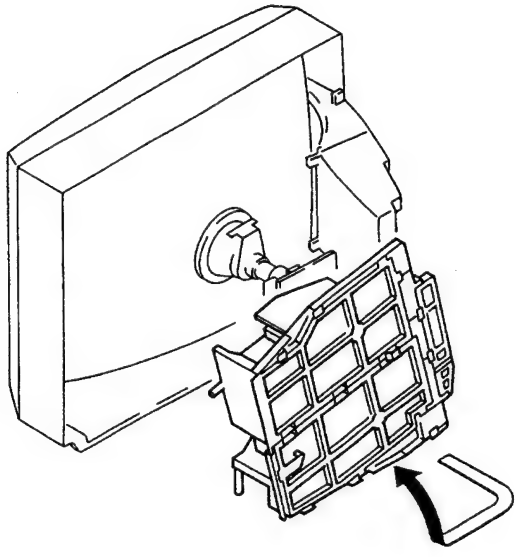

2-6. EXTENSION CABLE

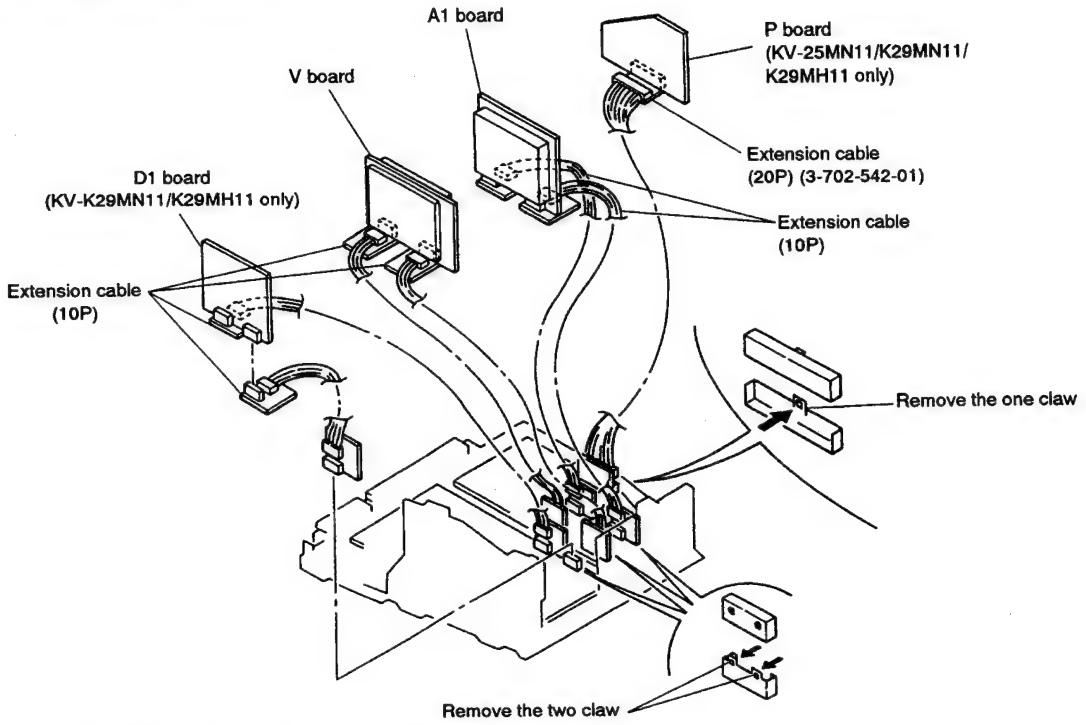

2-7. DEMAGNETIZATION COIL REMOVAL

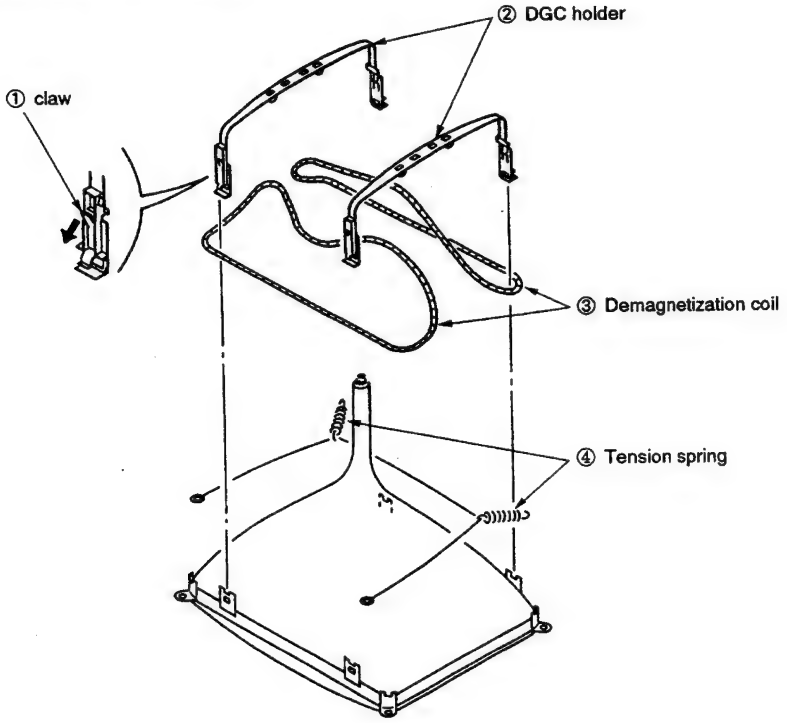

2-8. PICTURE TUBE REMOVAL

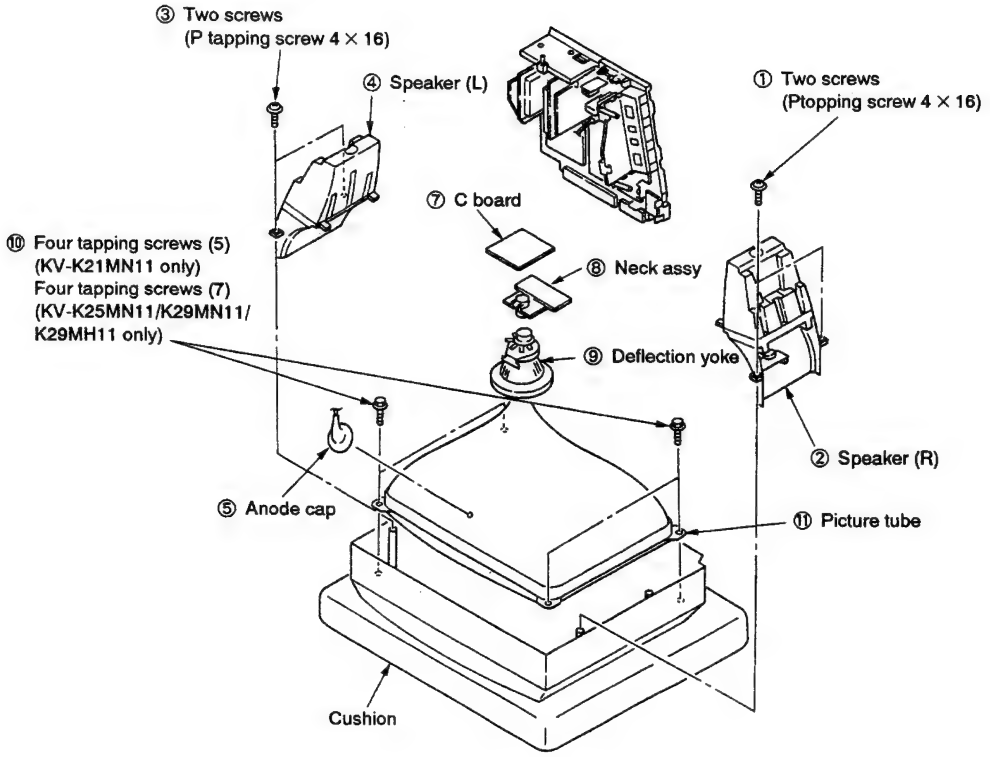

- **REMOVAL OF ANODE-CAP**

Note: Short circuit the anode of the picture tube and the anode cap to the metal chassis, CRT shield, or carbon painted on the CRT, after removing the anode.

- **REMOVING PROCEDURES**

① Turn up one side of the rubber cap in the direction indicated by the arrow ⓐ.

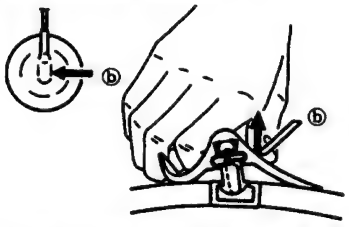

② Using a thumb pull up the rubber cap firmly in the direction indicated by the arrow ⓑ.

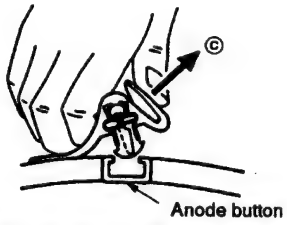

③ When one side of the rubber cap is separated from the anode button, the anode-cap can be removed by turning up the rubber cap and pulling up it in the direction of the arrow ⓒ.

- **HOW TO HANDLE AN ANODE-CAP**

① Don't hurt the surface of anode-caps with sharp shaped material !
② Don't press the rubber hardly not to hurt inside of anode-caps !
A metal fitting called as shatter-hook terminal is built in the rubber.
③ Don't turn the foot of rubber over hardly !
The shatter-hook terminal will stick out or hurt the rubber.

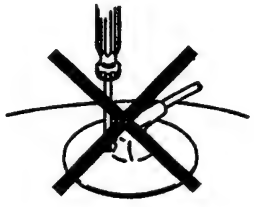

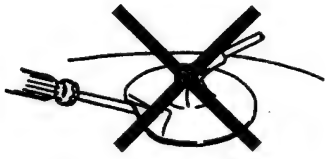

2-9. HARNESS LOCATION

(1) TOP VIEW

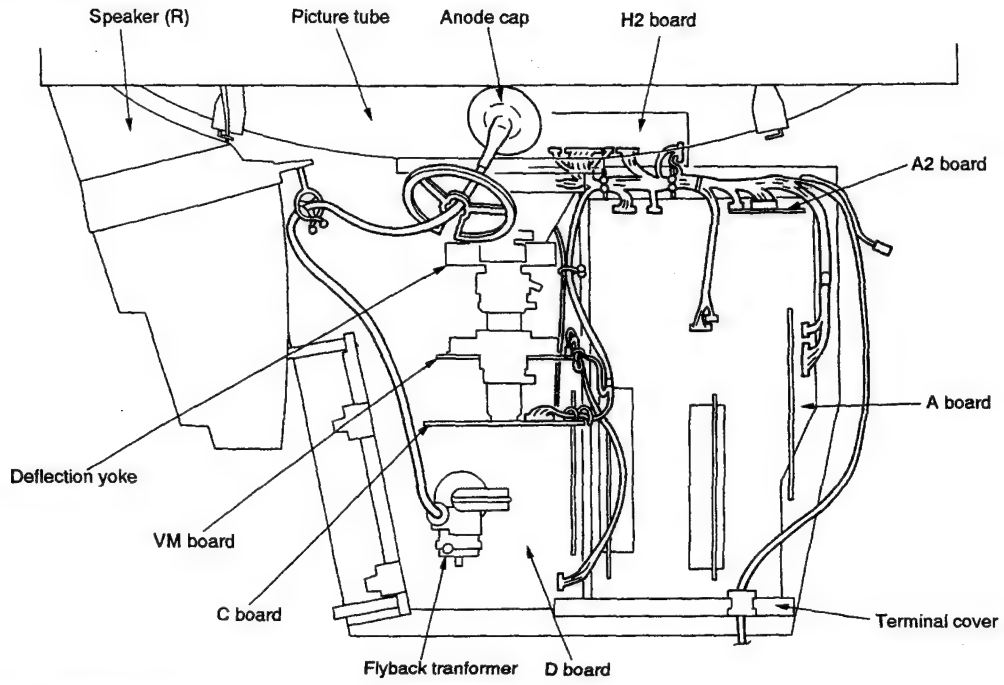

(2) TOP VIEW (LEFT)

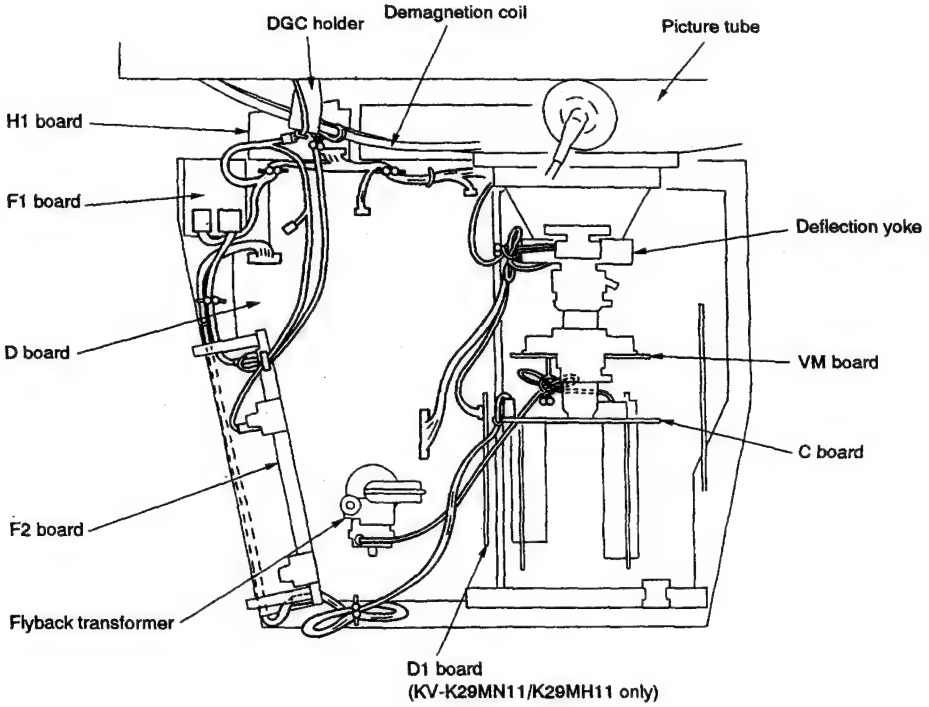

(3) LEFT SIDE VIEW

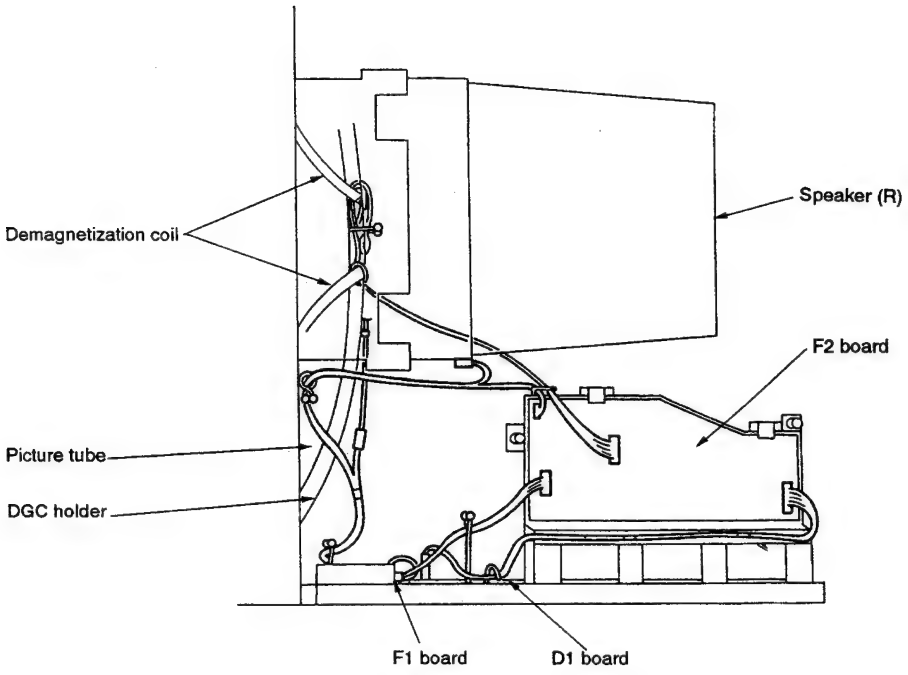

(4) RIGHT SIDE VIEW

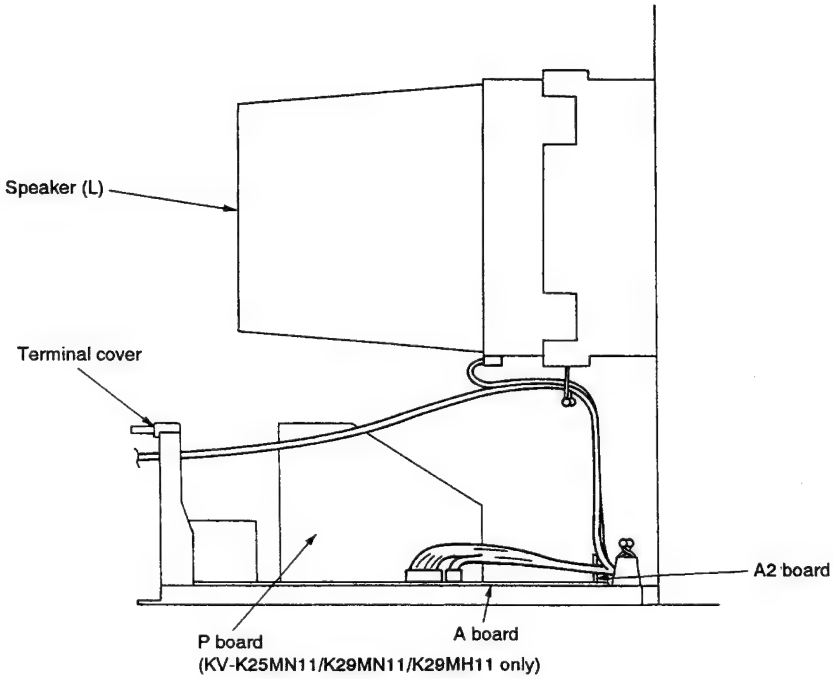

SECTION 3

SET-UP ADJUSTMENTS

- The following adjustments should be made when a complete realignment is required or a new picture tube is installed.
- These adjustments should be performed with rated power supply voltage unless otherwise noted.

Controls and switch should be set as follows unless otherwise noted :

PICTURE control . . . . . RESET
BRIGHTNESS control . . . . . center

Perform the adjustments in order as follows :

1. Beam Landing
2. Convergence
3. Focus
4. White Balance

Note : Test Equipment Required.

1. Color-bar/Pattern Generator
2. Degausser
3. Oscilloscope

Preparations :

- In order to reduce the influence of geomagnetism on the set's picture tube face it east or west.
- Switch on the set's power and degauss with the degausser.

3-1. BEAM LANDING

1. Input the white signal with the pattern generator.
   Contrast
   Bightness } normal
2. Position neck ass'y as shown in Fig 3-2.
3. Set the pattern generator raster signal to red.
4. Move the deflection yoke to the rear and adjust with the purity control so that the red is at the center and the blue and the green take up equally sized areas on each side.
   (See Figures 3-1 through 3-3.)
5. Move the deflection yoke forward and adjust so that entire screen is red. (See Figure 3-1.)
6. Switch the raster signal to blue, then to green and verify the condition.
7. When the position of the deflection yoke has been decided, fasten the deflection yoke with the screws.
8. If the beam does not land correctly in all the corners, use a magnet to adjust it.
   (See Figure 3-4.)

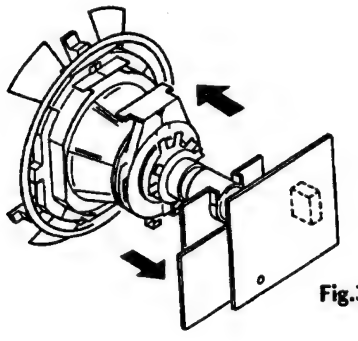

Fig.3-1

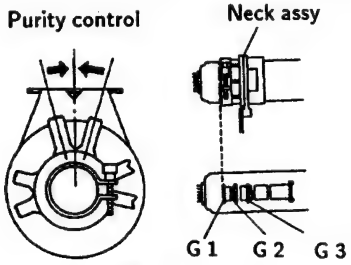

Fig.3-2

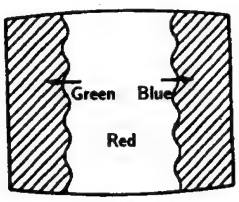

Fig.3-3

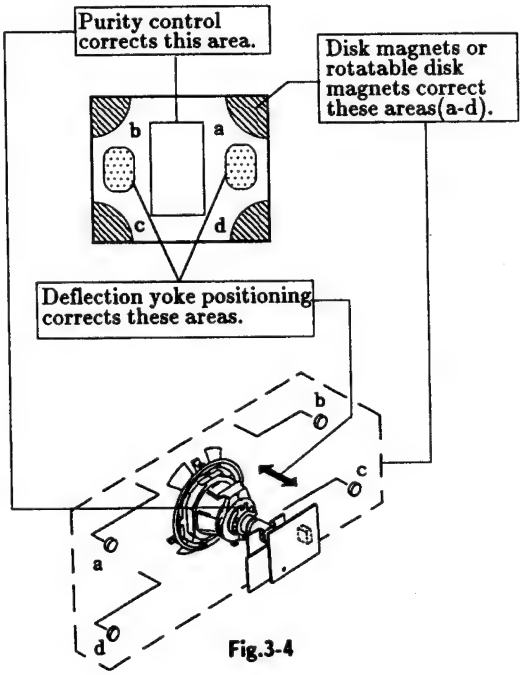

Fig.3-4

3-2. CONVERGENCE

Preparation :

- Before starting this adjustment, adjust the focus, horizontal size, and vertical size.
- Minimize the brightness setting.
- Provide dot pattern.

(1) **Horizontal and Vertical Static Convergence**

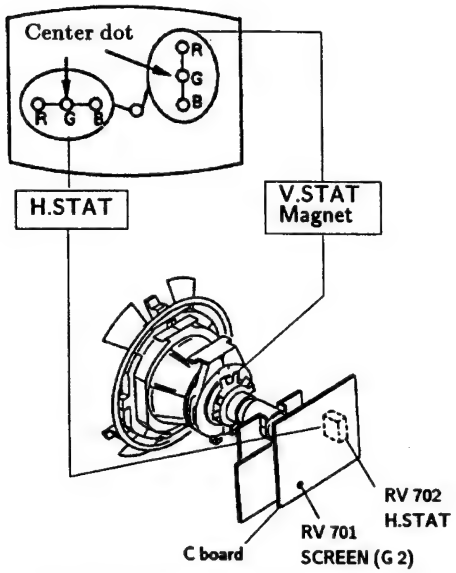

1. (Moving horizontally), adjust the H.STAT control so that the red, green, and blue points are on top of each other at the center of the screen.
2. (Moving vertically), adjust the V.STAT magnet so that the red, green, and blue points are on top of each other at the center of the screen.
3. If the H.STAT variable resistor cannot bring the red, green, and blue points together at the center of the screen, adjust the horizontal convergence with the H.STAT variable resistor and the V. STAT magnet in the manner given below.
   (In this case, the H.STAT variable resistor and the V.STAT magnet influence each other)

- Tilt the V.STAT magnet and adjust the static convergence by opening or closing the V.STAT magnet.

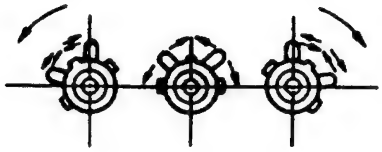

4. If the V.STAT magnet is moved in the direction of the ⓐ and ⓑ arrows, the red, green, and blue points move as shown below.

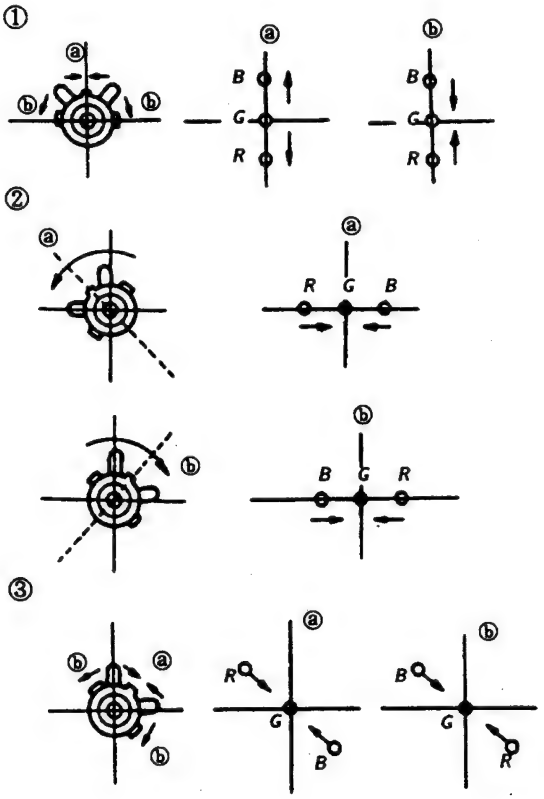

- Operation of BMC (Hexapole) Magnet

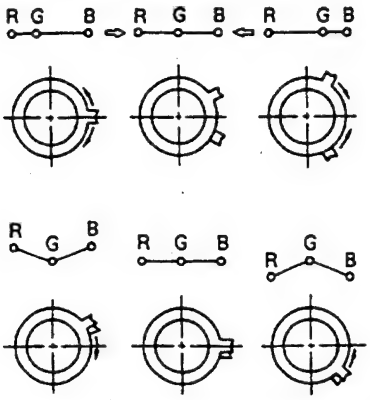

- The respective dot positions resulting from moving each magnet interact, so be sure to perform adjustment while tracking.
  Use the H.STAT VR to adjust the red, green, and blue dots so they coincide at the center of screen (by moving the dots in the horizontal direction).

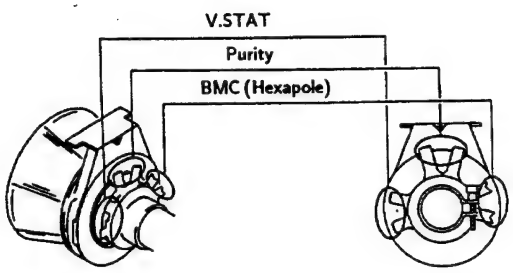

• Y separation axis correction magnet adjustment

1. Receive the cross-hatch signal, and adjust [PIX] to "MIN" and [BRT] to "standard".
2. Adjust the deflection yoke to the upright condition when it hits the CRT.
3. Adjust so that the Y separation axis correction magnet on the neck assembly is symmetrical at the top and bottom (open state).
4. Return the deflection yoke to its original position.

(2) **Dynamic Convergence Adjustment**

Preparations :

- Before starting this adjustment, adjust the horizontal static convergence and the vertical static convergence.

1. Slightly loosen the deflection yoke screws.
2. Remove the deflection yoke spacer.
3. Move the deflection yoke as shown in the figure below and optimize the convergence.
4. Tighten the deflection yoke screws.
5. Install the defelection yoke spacer.

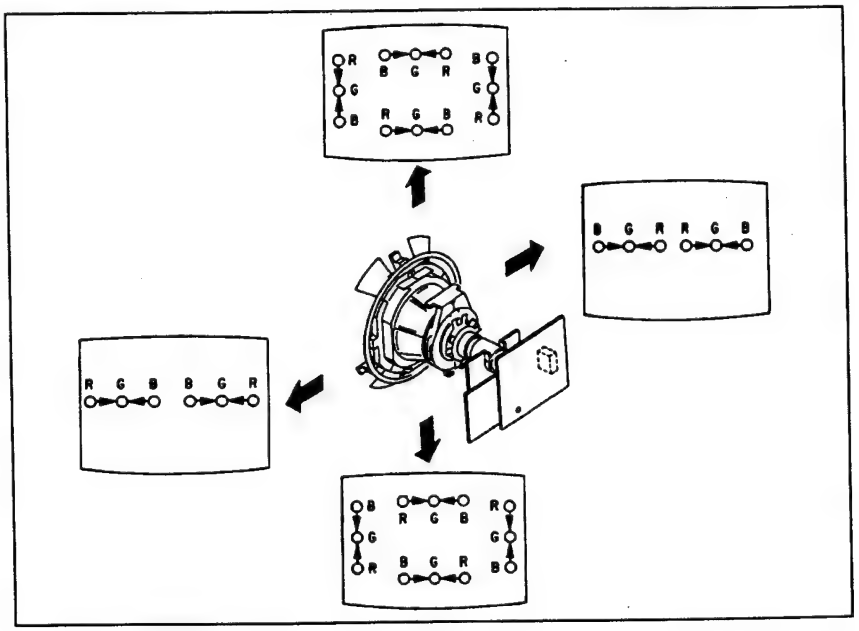

(3) Screen-corner Convergence

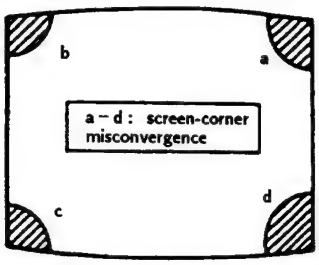

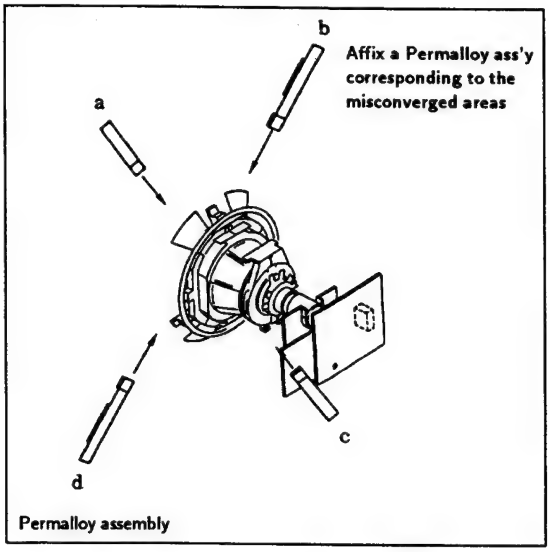

3-3. FOCUS ADJUSTMENT

Adjust FOCUS control on the flyback transformer for a best focus.

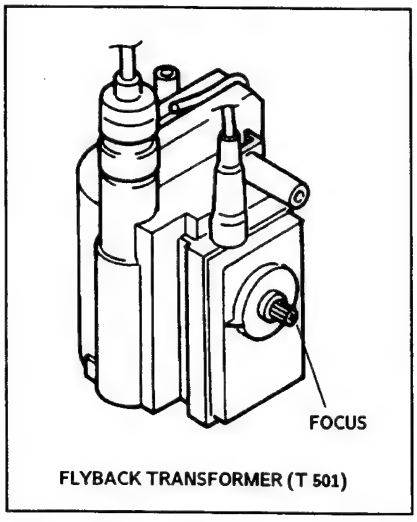

a. AN ITEM OF ADJUSTMENT

Item number	Adjustment item	Standard DATA				Note
		50 Hz		60 Hz		
		Normal	Wide	Normal	Wide	
07	GDR	1F	1F	1F	1F	G Drive
08	BDR	1F	1F	1F	1F	B Drive
09	GCT	07	07	07	07	G CUT-OFF
0A	BCT	07	07	07	07	B CUT-OFF
05	SBR	1F	1F	1F	1F	SUB-BRIGHTNESS

b. METHOD OF CANCELLATION FROM SERVICE MODE

Set the standby condition (Press POWER button on the commander) in the next place, press POWER button again, hereupon it becomes TV mode.

c. METHOD OF WRITE FOR MEMORY

1) Set to Service Mode.
2) Press 1 (UP) and 4 (DOWN), select an item of adjustments.
3) Press MUTE button indicate WRITE (RED) on screen.
4) Press 0 button to write for memory.

d. MEMORY WRITE CONFIRMATION METHOD

1) After adjustment, pull out the plug from AC outlet, and next place, plug in AC outlet again.
2) Turn the power switch ON and set to Service Mode.
3) Call the adjusted items again, confirm they were adjusted.

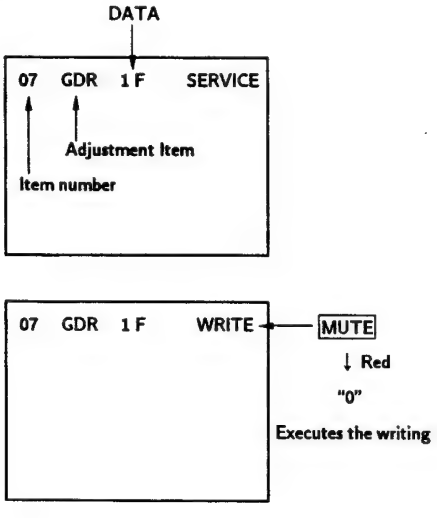

3-4. G2 (SCREEN) AND WHITE BALANCE ADJUSTMENTS

1. G 2 (SCREEN) ADJUSTMENT(RV 701)

1) Set the PICTURE and BRIGHTNESS to normal.
2) Put to VIDEO input mode without signals.
3) Set to Service Mode.
4) Change BLU data of the item number "57" from "01" to "00". (To turn off Blue Black.)
5) Press MUTE, and 0 to write the data in the memory.
6) Connect R, G, and B of the C board cathode to the oscilloscope.
7) Adjust G2 (RV701) volume to the value below.

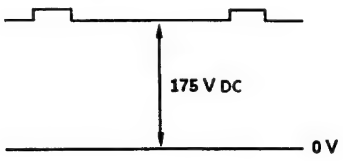

8) Re-set BLU data of the item number "57" from "00" back to "01".
9) Press MUTE, and 0 to write the data in the memory.

2. WHITE BALANCE ADJUSTMENTS

1) Set to service mode.
2) Input an entire white signal.
3) Set the PICTURE to minimum.
4) Select SBR with 1 and 4, and then set the level to minimum with 3 and 6.
5) Select GCT and BCT with 1 and 4.
   And adjust the level with 3 and 6 for the best white balance.
6) Set the PICTURE to maximum.
7) Select GDR and BDR with 1 and 4, and adjust the level with 3 and 6 for the best white balance.
8) Write into the memory by pressing MUTE → then 0.

3. SUB BRIGHT ADJUSTMENT

1) Set to service mode.
2) Input a staircase signal of black and white from the pattern generator.
3) BRIGHTNESS ··· RESET
   PICTURE ····· minimum
4) Select SBR with 1 and 4, and adjust SBR level with 3 and 6 so that the stripe second from the right is dimly lit.

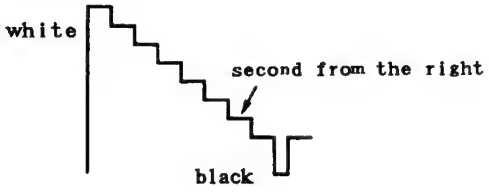

SECTION 4
CIRCUIT ADJUSTMENTS

4-1. ADJUSTMENTS WITH COMMANDER

Servise adjustments are made with the RM-845 that comes with this unit.

Entering service mode

With the unit on standby

↓

"DISPLAY"

↓

"5"

↓

"VOL (+)"

↓

"POWER"

This operation sequence puts the unit into servise mode.

"1", "4"	Raise/lower the service item number
"3", "6"	Raise/lower the data
"MUTE"	Writes
"0"	Executes the writing

"7", "0"	The data all becomes the values in memory
"8", "0"	User control all goes to the standard state
"9"	H-FRE automatic adjustment
"5", "0"	Service data initialization (Besure not to use usually.)
"2", "0"	Write 50Hz adjustment data to 60Hz, or in opposition.

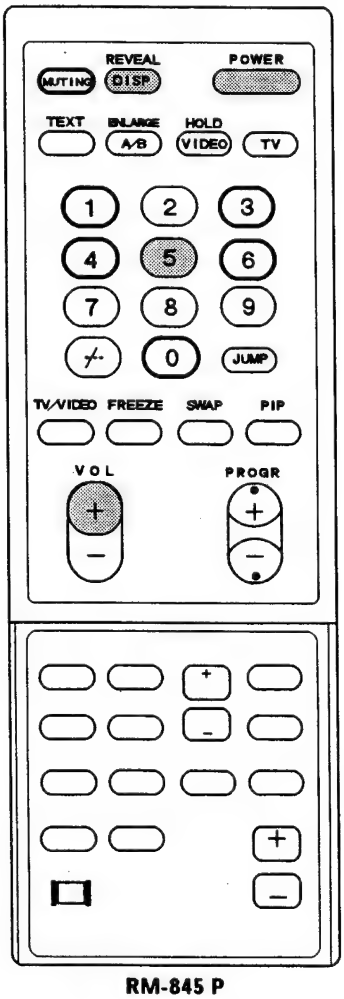

RM-845 P

The screen display is :

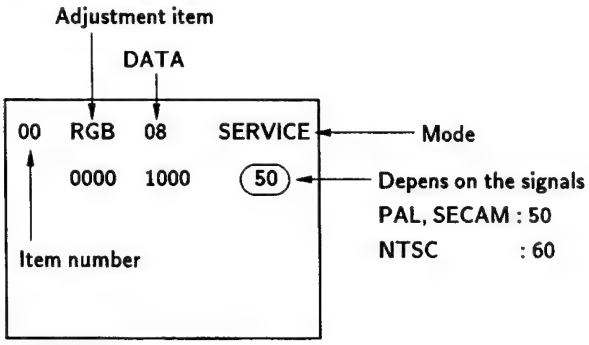

"1", "4"	Select the adjustment item.
↓	
"3", "6"	Raise/lower the data.
↓	
"MUTE"	Writes
↓	
"0"	Executes the writing.

4-2. ADJUSTMENT METHOD

Item Number 24

This explanation uses V-SHFT as an example.

1. Select 24 V-SHFT with the "1" and "4" buttons.
2. Raise/lower the data with the "3" and "6" buttons.
3. Select the optimum state. (The standard is for 0F PAL reception.)
4. Write with the MUTE button. (The display changes to blue WRITE.)
5. Execute the writing with the "0" button. (The WRITE display changes briefly to red.)

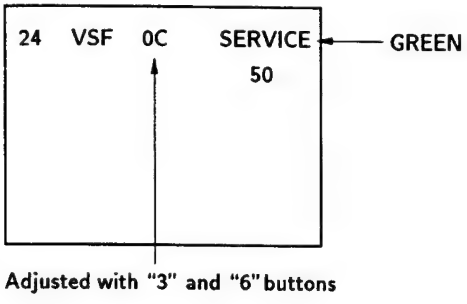

Adjusted with "3" and "6" buttons

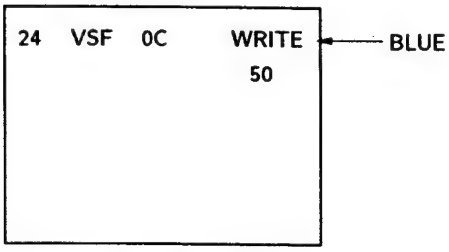

Written with "MUTE"

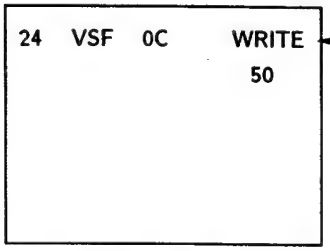

The WRITE display changes briefly to red, then the display returns to a green SERVICE.

Write excuted with "0"

Use the same method for Items Number 00-5E. Use "1" and "4" to select the adjustment item, use "3" and "6" to adjust, write with "MUTE", then execute the write with "0".

Note : In "WRITE", the data of all items are wrote together to memory.

- H-FRE can be adjusted automatically. Feed a standard signal and input "9", the automatic adjustment is executed.
- As for V-FREQ, by searching the bolded screen V range with adjusting data.

Note : In item 02 50Hz, or item 03 60Hz, it operates normally in spite of the 50Hz or the 60Hz of the input signal. Therefore be sure to adjust data according to the input signal.

Item number	Adjustment Item	Data range	Standard DATA				Note	(Device)
			50 Hz		60 Hz			
			Normal	Wide	Normal	Wide		
00	RGB	00~0F	07	07	07	07	RGB PICTURE	(CXA 1587 S)
01	SCN	00~0F	08	06	08	06	SUB-Contrast	(CXA 1587 S)
02	VM	00~03	02	02	02	02	VM Level	(CXA 1587 S)
03	SCL	00~0F	08	07	08	07	SUB-COLOR	(CXA 1587 S)
04	SHU	00~0F	08	08	08	08	SUB-HUE	(CXA 1587 S)
05	SBR	00~3F	1F	1F	1F	1F	SUB-BRIGHTNESS	(CXA 1587 S)
06	ABL	00~03	03	03	02	02	ABL Mode	(CXA 1587 S)
07	GDR	00~3F	1F	1F	1F	1F	G Drive	(CXA 1587 S)
08	BDR	00~3F	1F	1F	1F	1F	B Drive	(CXA 1587 S)
09	GCT	00~0F	07	07	07	07	G CUT-OFF	(CXA 1587 S)
0A	BCT	00~0F	07	07	07	07	B CUT-OFF	(CXA 1587 S)
0B	AKR	00~FF	7F	7F	7F	7F	AKB OFF R CUT-OFF	(CXA 1587 S)
0C	AKG	00~FF	7F	7F	7F	7F	AKB OFF G CUT-OFF	(CXA 1587 S)
0D	AKB	00~FF	7F	7F	7F	7F	AKB OFF B CUT-OFF	(CXA 1587 S)
0E	GMA	00~0F	0C	0C	0C	0C	γ control	(CXA 1587 S)
0F	DCT	00~03	00	00	00	00	DC TRAN	(CXA 1587 S)
10	DPI	00~03	03	03	03	03	D-PIC	(CXA 1587 S)
11	YFI	00~3F	22	22	22	22	Y Filter Adjust	(CXA 1587 S)
12	SHL	00~01	01	01	01	01	SHP-LIM	(CXA 1587 S)
13	YDL	00~0F	07	07	07	07	Y Delay Time	(CXA 1587 S)
14	YSW	00~03	01	01	01	01	Y-SW OUT	(CXA 1587 S)
15	HSH	00~3F	24	24	28	28	H Shift	(CXA 1587 S)
16	POV	00~0F	08	08	08	08	Pre-Over	(CXA 1587 S)
17	SHF	00~03	02	02	02	02	SHP-F 0	(CXA 1587 S)
18	SSH	00~03	01	01	02	02	SUB-Sharpness	(CXA 1587 S)
19	RMT	00~01	00	00	00	00	R-Mute	(CXA 1587 S)
1A	GMT	00~01	00	00	00	00	G-Mute	(CXA 1587 S)
1B	BMT	00~01	00	00	00	00	B-Mute	(CXA 1587 S)
1C	AG 1	00~01	00	00	00	00	Aging 1 (White)	(CXA 1587 S)
1D	AKF	00~01	00	00	00	00	AKB-OFF	(CXA 1587 S)
1E	SMD	00~01	00	00	00	00	Scan Mode	(CXA 1587 S)
1F	VEX	00~01	00	00	00	00	V-Extension	(CXA 1587 S)
20	AFC	00~03	03	03	03	03	AFC Loop Gain	(CXA 1587 S)
21	AFF	00~01	00	00	00	00	AFC-OFF	(CXA 1587 S)
22	RFP	00~01	00	00	00	00	Reference Position	(CXA 1587 S)
23	VSZ	00~3F	1E	1E	1A	1A	V-Size	(CXD 2018 Q)
24	VSF	00~3F	2E	2E	32	32	V-Shift	(CXD 2018 Q)
25	SCR	00~F	08	08	08	08	S-Correction	(CXD 2018 Q)
26	VLN	00~F	08	08	08	08	V-Linearity	(CXD 2018 Q)
27	HSZ	00~3F	0C	0C	0 E	0 E	H-Size	(CXD 2018 Q)
28	PAP	00~3F	2E	2E	2E	2E	Pin-Amp	(CXD 2018 Q)
29	TLT	00~0F	09	09	09	09	Tilt	(CXD 2018 Q)
2A	UCP	00~0F	0A	0A	0A	0A	Upper Corner Pin	(CXD 2018 Q)
2B	LCP	00~0F	0C	0C	0C	0C	Lower Corner Pin	(CXD 2018 Q)
2C	VBW	00~0F	08	08	08	08	V-Bow	(CXD 2018 Q)
2D	VAG	00~0F	08	08	08	08	V-Angle	(CXD 2018 Q)
2E	HVV	00~07	04	04	04	04	HV-Comp-V	(CXD 2018 Q)
2F	HVH	00~07	00	00	00	00	HV-Comp-H	(CXD 2018 Q)
30	FCL	00~07	03	03	03	03	Frame Color	(SDA 9188)
31	FON	00~01	01	01	01	01	Frame ON	(SDA 9188)
32	DLY	00~07	00	00	00	00	Select Delay LL 3 P	(SDA 9188)
33	P-V	00~0F	07	07	07	07	V read delay	(SDA 9188)
34	PVS	00~07	04	04	04	04	PIP-V offset	(SDA 9188)
35	P-H	00~3F	0A	0A	07	07	H read delay	(SDA 9188)
36	PHS	00~0F	07	07	03	03	PIP-H offset	(SDA 9188)
37	CTR	00~0 F	0A	0A	0A	0A	Contrast	(SDA 9188)
38	FWV	00~01	01	01	01	01	Frame Width V	(SDA 9188)
39	FWH	00~01	01	01	01	01	Frame Width H	(SDA 9188)
3A	DVI	00~0F	07	07	07	07	Setting Delay VSI	(SDA 9188)
3B	DVP	00~0 F	0F	0F	0F	0F	Delay VSP Pulse	(SDA 9188)
3C	BRT	00~0 F	0C	0C	0C	0C	Frame BRIGHT Data	(SDA 9188)

Item number	Adjustment Item	Data range	Standard DATA				Note	(Device)
			50 Hz		60 Hz			
			Normal	Wide	Normal	Wide		
3D	LEV	00~0 F	00	00	00	00	Level Adjust	(TDA 9840)
3E	STR	00~3 F	02	02	02	02	Stereo Adjust	(TDA 9840)
3F	AXG	00~01	00	00	00	00	AUX Output Gain	(TDA 8204)
40	AXM	00~01	00	00	00	00	AUX Output Mute	(TDA 8204)
41	VCX	00~01	00	00	00	00	VCXO free run	(TDA 8204)
42	ERC	00~01	00	00	00	00	Error count Time	(TDA 8204)
43	MXE	00~01	00	00	00	00	MAX. allowed Error	(TDA 8204)
44	SRO	00~01	00	00	00	00	SRO set Bit	(TDA 8204)
45	ATO	00~00	01	01	01	01	Auto Selection	(TDA 8204)
46	SYS	00~01	00	00	00	00	System select	(TDA 8204)
47	FSW	00~03	00	00	00	00	Force Switch	(TDA 8204)
48	SYN	00~01	01	01	01	01	Synthesizer	(TDA 8204)
49	VCR	00~01	00	00	00	00	VCC Reference Sw	(CXP 1315 P)
4A	SEL	00~FF	5F	5F	5 F	5F	Separation Level	(CXP 1315 P)
4B	DCS	00~3F						
4C	UYB	00~3F						
4D	LYB	00~3F						
4E	HAP	00~3F						
4F	HTL	00~3F						
50	UCB	00~3F						
51	UTL	00~3F						
52	LCB	00~3F						
53	LTL	00~3F						
54	TXP	00~0 F	00	00	00	00	Teletext Picture	(Teletext μ-Con
55	ODL	00~FF	10	10	10	10	Power ON Delay	(CXP 80424)
56	OSH	00~3 F	0F	0F	0F	0F	OSD Position H	(CXP 80424)
57	BLU	00~01	01	01	01	01	Blue Back Feature	(CXP 80424)
58	ROC	00~0F	07	07	07	07	Center of Rotation	(CXP 80424)
59	ROS	00~07	03	03	03	03	Step Width	(CXP 80424)
5A	HTR	00~3 F	1 F	1 F	1 F	1 F	H Trapezoid	(CXP 80424)
5B	MUT	00~01	01	01	01	01	No Sync. Mute	(CXP 80424)
5C	DID	00~01	00	00	00	00	Disable Degauss	(CXP 80424)
5D	OP0	00~FF	*1	*1	*1	*1	Option 0	(CXP 80424)
5E	OP1	00~0F	*2	*2	*2	*2	Option 1	(CXP 80424)

*1 Input data are different according to models.

Item	CCD	Text	PinP	Jpn	NICM	W. G	MTS	Comb
KV-K21MN11	0	1	0	0	1	1	0	1
KV-K25MN11	0	1	1	0	1	1	0	1
KV-K29MN11	0	1	1	0	1	1	0	1
KV-K29MH11	0	1	1	0	1	1	0	1

*2 Input data are different according to models.

Item	—	—	—	—	Mono	Tilt	Dcon	Chin
KV-K21MN11	0	0	0	0	0	0	0	1
KV-K25MN11	0	0	0	0	0	0	0	1
KV-K29MN11	0	0	0	0	0	1	0	1
KV-K29MH11	0	0	0	0	0	1	0	1

PICTURE QUALITY ADJUSTMENTS

Numbers 03-05, 18

:CL
:HU
:BR
:SH
} Set to the standard values.

DISPLAY POSITION ADJUSTMENT

Numbers 35-36

'-V Pin-P vertical position correction
'VS Pin-P vertical offset
'-H Pin-P horizontal position correction
'HS horizontal offset

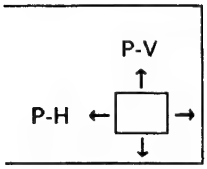

ıen pressing PIP"POSITION" key in the vice mode, "POSITION" turns round and ınd automatically.

Numbers 33-36 are set to the standard values.

'XP Teletext picture
orrects the brightness for when teletext is :ceived.
tandard value is 05.

4-5. PICTURE DISTORTION ADJUSTMENT

Item Numbers 23-2D

23 VSZ (V SIZE)

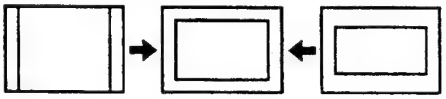

24 VSF (V SHIFT)

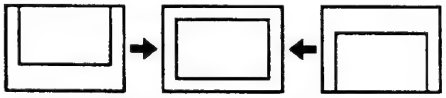

25 SCR (VERTICAL S correction)

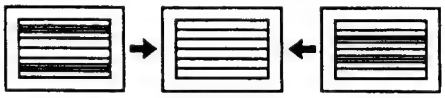

26 VLN (V LINEARITY)

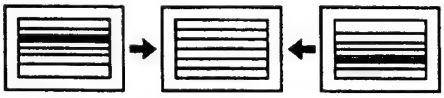

27 HSZ (H SIZE)

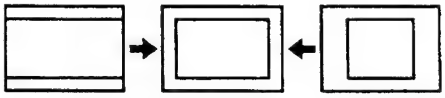

28 PAP (PIN AMP)

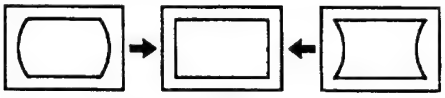

29 TLT (TILT)

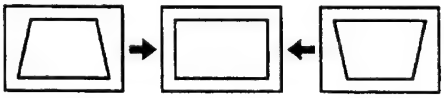

2A UCP (Upper Corner Pin)
2B LCP (Lower Corner Pin)

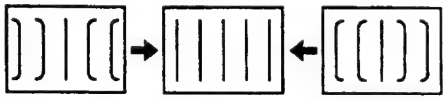

2C VBOW (V-BOW)

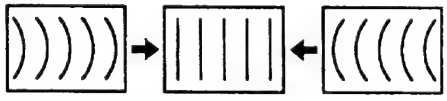

2D VAG (V-ANGLE)

CIRCUIT BOARDS LOCATION

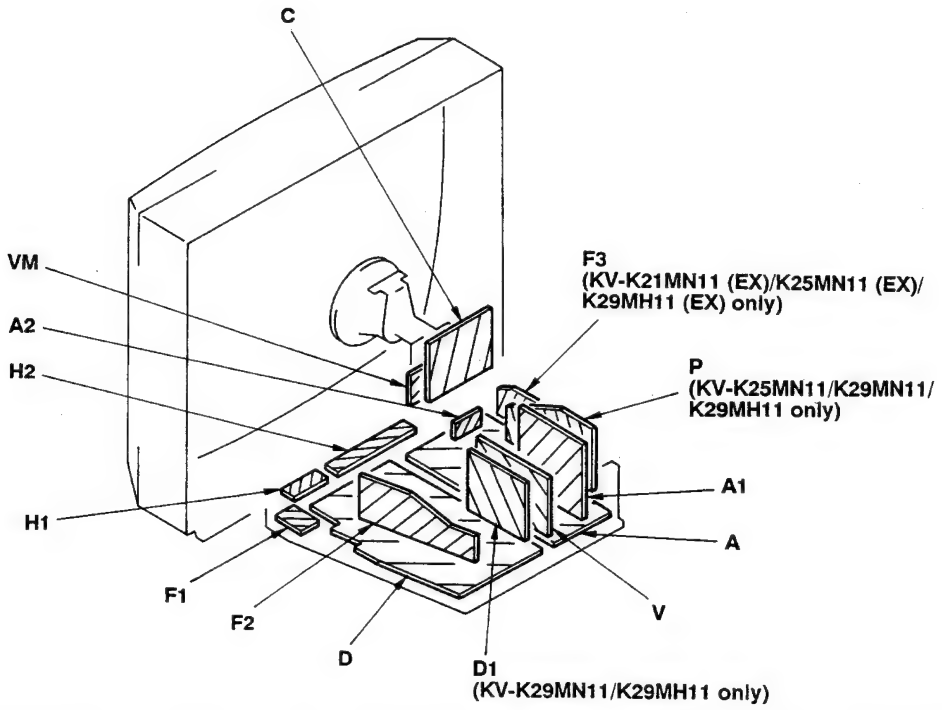

SECTION 6
DIAGRAMS

6-1. BLOCK DIAGRAM

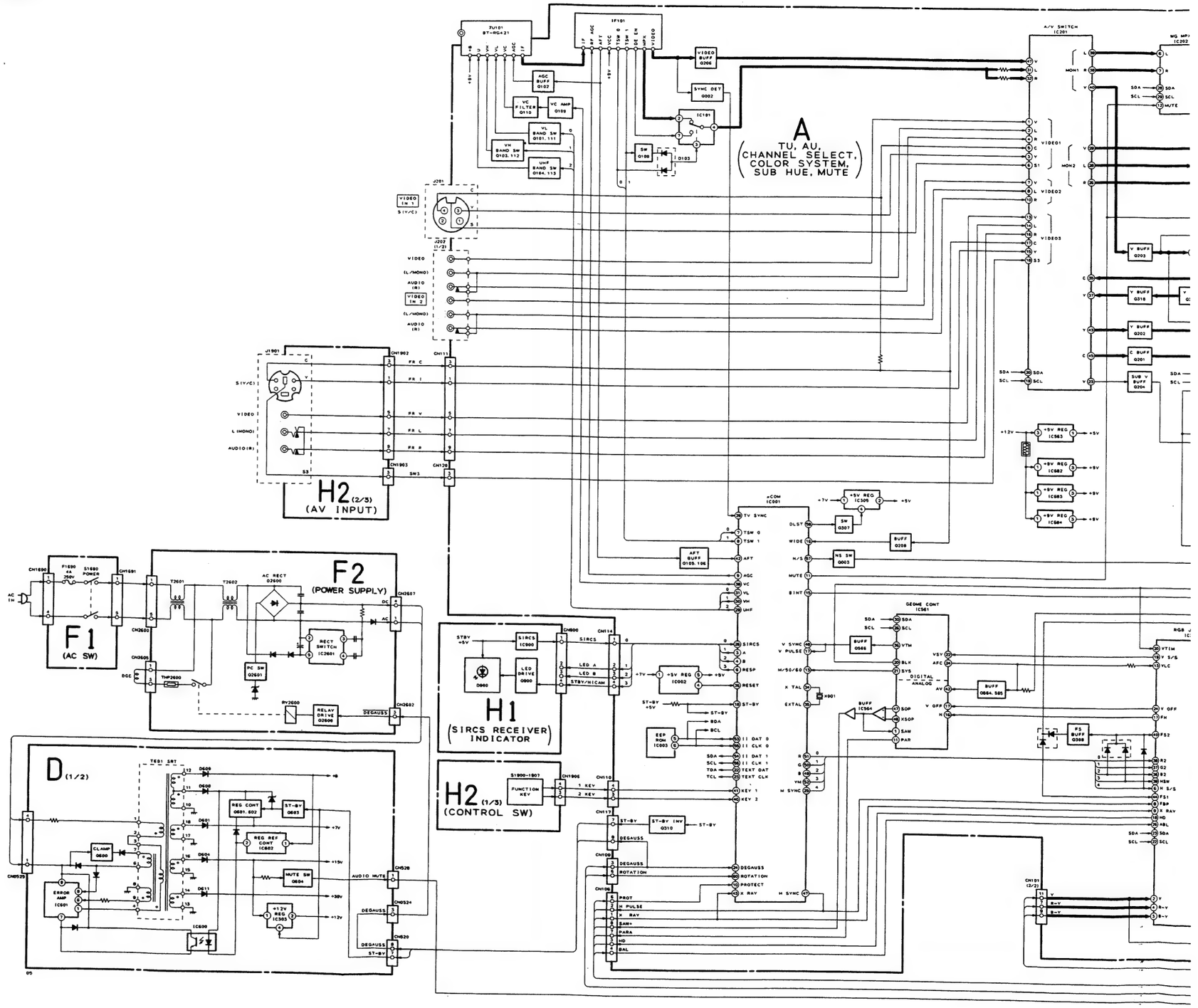

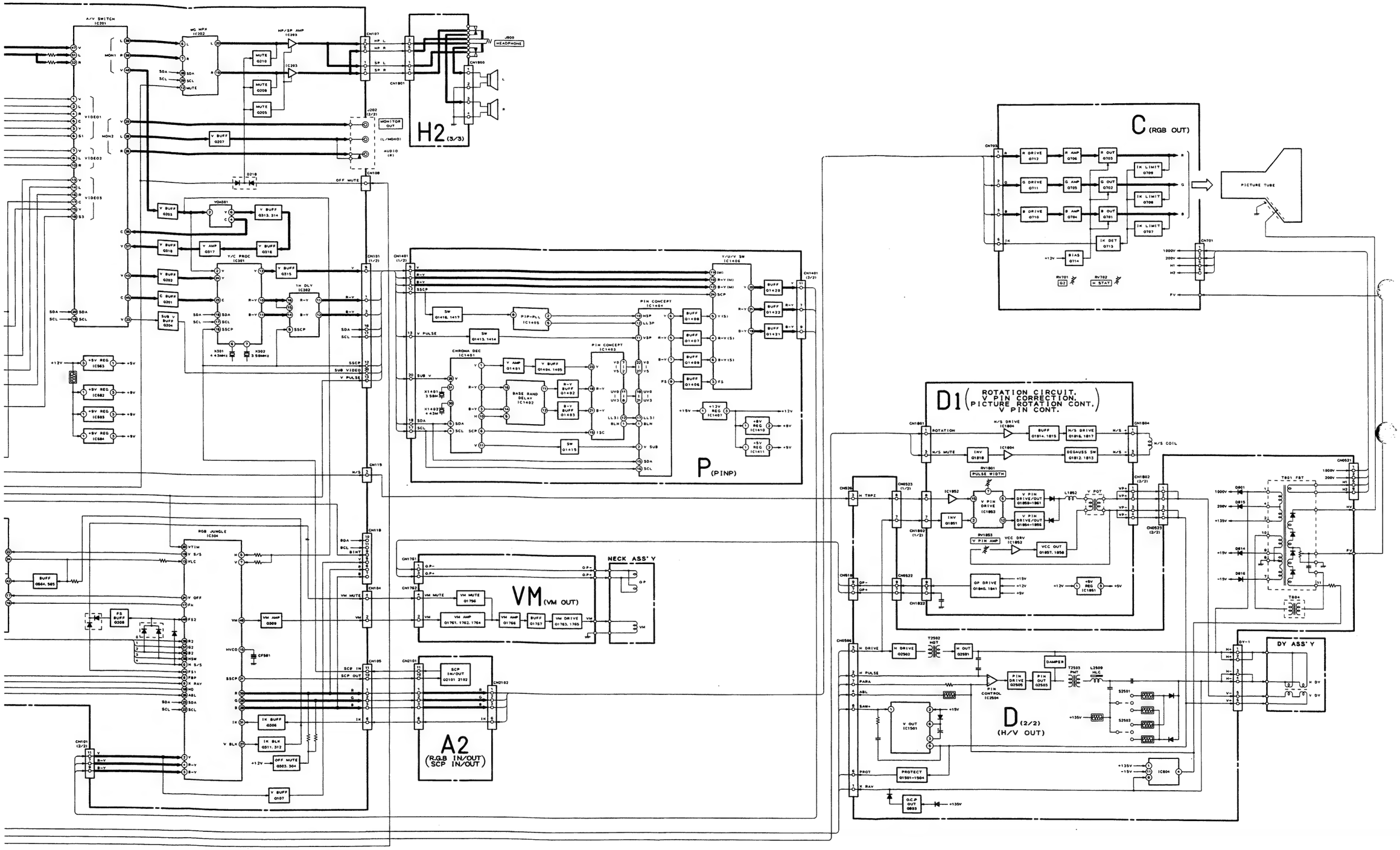
A/V SWITCH IC201
WG MPX IC202
HP/SP AMP IC203
CN107
CN1901
CN1900
J900 HEADPHONE
H2 (3/3)
MONITOR OUT
AUDIO (R)
CN108
OFF MUTE
V BUFF 0207
D218
YOH301
V BUFF 0203
V BUFF 0316
V BUFF 0313, 314
V AMP 0317
V/C PROC IC301
V BUFF 0315
C BUFF 0201
SUB V BUFF 0204
1H DLY IC302
X301 4.43MHz
X302 3.58MHz
CN101 (1/2)
+5V REG IC1403
+5V REG IC1402
+5V REG IC1405
+5V REG IC1404
CN1401 (1/2)
SW Q1416, 1417
PIP-PLL IC1405
SW Q1413, 1414
CHROMA DEC IC1401
V AMP Q1401
V BUFF Q1404, 1405
BASE BAND DELAY IC1402
R-Y BUFF Q1402
B-Y BUFF Q1403
X1401 3.58M
X1402 4.43M
SW Q1415
PIN CONCEPT IC1403
PIN CONCEPT IC1404
Y/U/V SW IC1406
BUFF Q1428
BUFF Q1422
BUFF Q1421
BUFF Q1408
BUFF Q1407
BUFF Q1409
BUFF Q1406
+12V REG IC1407
+8V REG IC1410
+5V REG IC1411
P (PINP)
C (RGB OUT)
R DRIVE Q712
G DRIVE Q711
B DRIVE Q710
R AMP Q706
G AMP Q705
B AMP Q704
R OUT Q703
G OUT Q702
B OUT Q701
IK LIMIT Q709
IK LIMIT Q708
IK LIMIT Q707
IK DET Q713
BIAS Q714
RV701 G2
RV702 H STAT
CN703
CN701
PICTURE TUBE
D1 (ROTATION CIRCUIT. V-PIN CORRECTION. PICTURE ROTATION CONT. V PIN CONT.)
CN1801
ROTATION
N/S MUTE
N/S DRIVE IC1804
BUFF Q1814, 1815
N/S DRIVE Q1816, 1817
INV Q1818
DEGAUSS SW Q1812, 1813
CN1804
N/S COIL
RV1801 PULSE WIDTH
CN1802 (2/2)
CN0523 (1/2)
H TRPZ
IC1852
INV Q1851
V PIN DRIVE IC1853
V PIN DRIVE/OUT Q1850-1861
V PIN DRIVE/OUT Q1854-1855
L1852
V POT
RV1853 V PIN AMP
VCC DRV IC1852
VCC OUT Q1857, 1858
CN1802 (1/2)
CN0522
GP DRIVE Q1840, 1841
+8V REG IC1851
CN1822
CN0523 (2/2)
CN0521
T851 FBT
D801
D815
D814
D816
T804
CN0516
H DRIVE
H PULSE
PARA
ABL
SAW+
PROT
X RAY
N DRIVE Q2502
T2502 HOT
H OUT Q2551
DAMPER
T2503 PWT
L2509 HLC
PIN DRIVE Q2505
PIN OUT Q2503
PIN CONTROL IC2504
S2551
S2552
V OUT IC1501
PROTECT Q1501-1504
O.C.P OUT Q893
IC804
D (2/2) (H/V OUT)
DY ASS'Y
DY-1
H DY
V DY
VM (VM OUT)
CN1751
CN1762
VM MUTE Q1756
VM AMP Q1761, 1762, 1764
VM AMP Q1766
BUFF Q1767
VM DRIVE Q1763, 1765
NECK ASS'Y
A2 (R.G.B IN/OUT) (SCP IN/OUT)
RGB JUNGLE IC304
BUFF Q864, 865
FS BUFF Q308
VM AMP Q309
CF581
IK BUFF Q306
IK BLK Q311, 312
OFF MUTE Q303, 304
V BUFF Q107
CN1101 (2/2)
CN1115
CN1118
CN1104
CN1105
CN2101
CN2102
SCP IN/OUT Q2101 2102

6-2. FRAME SCHEMATIC DIAGRAM

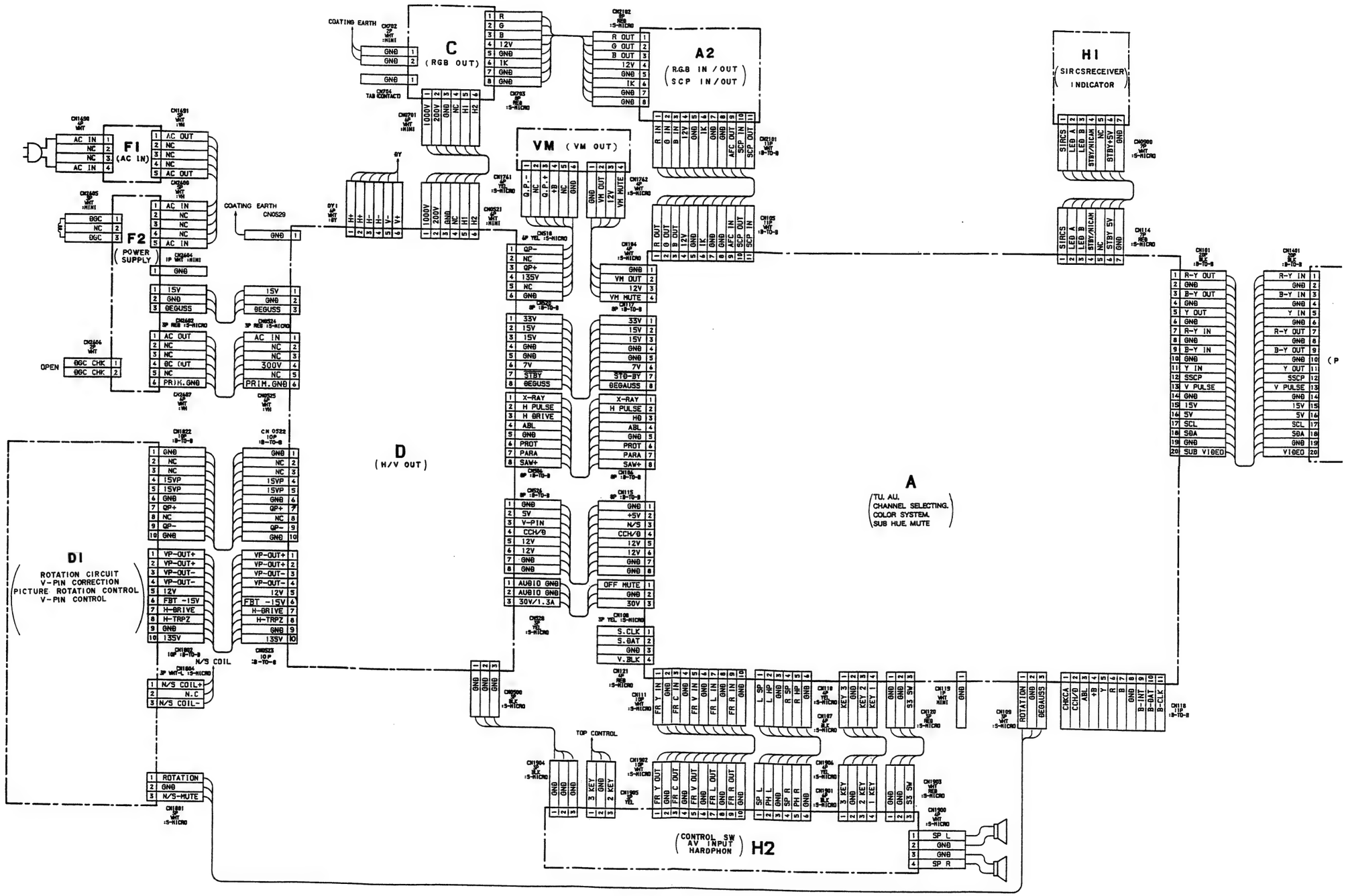

. CIRCUIT BOARDS LOCATION

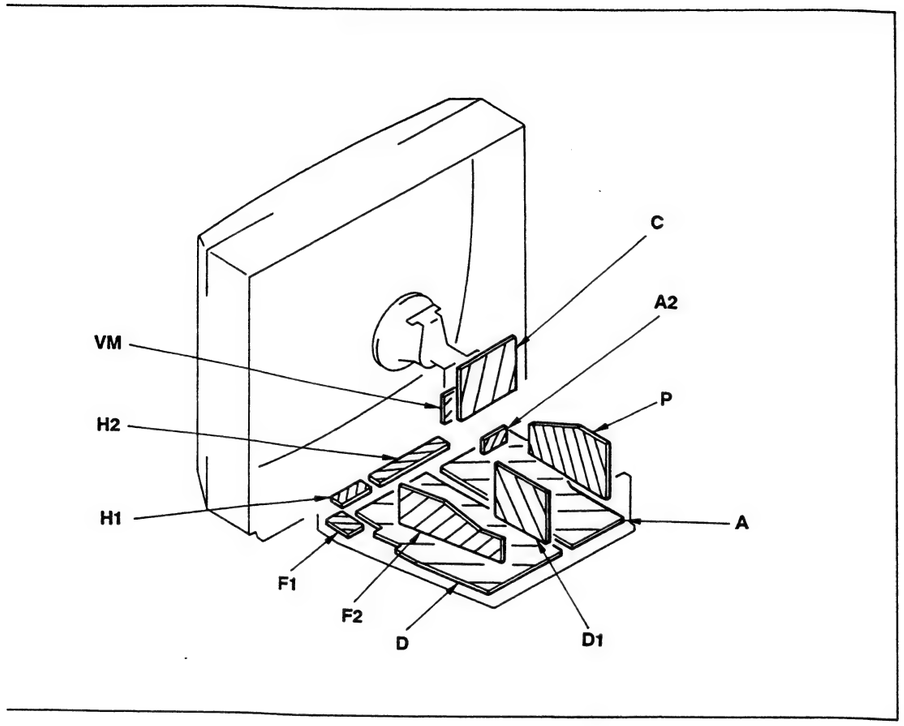

6-4. SCHEMATIC DIAGRAMS AND PRINTED WIRING BOARDS

Note:

- All capacitors are in μF unless otherwise noted. pF: μμF 50 WV or less are not indicated except for electrolytic and tantalums.
- All resistors are in ohms.
  kΩ =1000Ω, MΩ =1000KΩ
- Indication of resistance, which does not have one for rating electrical power, is as follows.

Pitch: 5 mm
Rating electrical power ¼ W (CHIP: 1/10W)

- : nonflammable resistor.
- △ : internal component.
- : panel designation, or adjustment for repair.
- All variable and adjustable resistors have characteristic curve B, unless otherwise noted.
- Readings are taken with a color-bar signal input.
  no mark : PAL
  〈 〉: SECAM
  ( ): NTSC 3.58
  ⟨ ⟩: NTSC 4.43
- Readings are taken with a 10 MΩ digital multimeter.
- Voltage are dc with respect to ground unless otherwise noted.
- Voltage variations may be noted due to normal production tolerances.
- All voltages are in V.
- ＊ : Can not be measured.
- Circled numbers are waveform reference.
- ▬▬▬ : B + bus.
- ▬ ▬ ▬ : B − bus.
- : signal path.

Note: The components identified by shading and mark ⚠ are critical for safety. Replace only with part number specified.

Reference information

RESISTOR	: RN	METAL FILM
	: RC	SOLID
	: FPRD	NONFLAMMABLE CARBON
	: FUSE	NONFLAMMABLE FUSIBLE
	: RS	NONFLAMMABLE METAL OXIDE
	: RB	NONFLAMMABLE CEMENT
	: RW	NONFLAMMABLE WIREWOUND
	: ※	ADJUSTMENT RESISTOR
COIL	: LF-8L	MICRO INDUCTOR
CAPACITOR	: TA	TANTALUM
	: PS	STYROL
	: PP	POLYPROPYLENE
	: PT	MYLAR
	: MPS	METALIZED POLYESTER
	: MPP	METALIZED POLYPROPYLENE
	: ALB	BIPOLAR
	: ALT	HIGH TEMPERATURE
	: ALR	HIGH RIPPLE

PRINTED WIRING BOARDS

F1 [AC IN] **H1** [SIRCS RECEIVER, INDICATOR] **F2** [POWER SUPPLY] **H2** [CONTROL SW, AV INPUT, HEADPHONE]

– F1 Board –

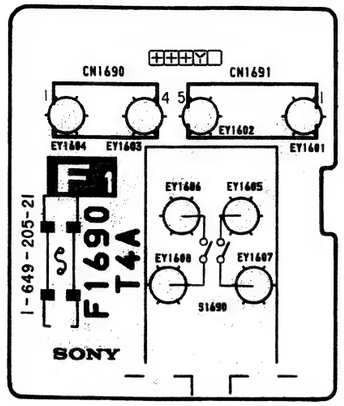

– H1 Board –

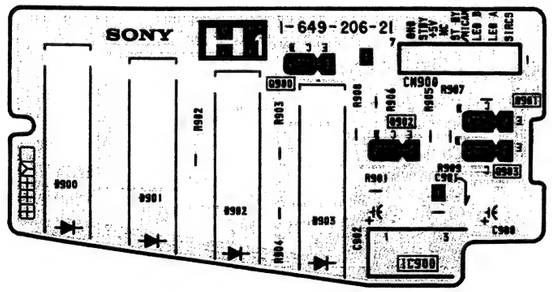

– F2 Board –

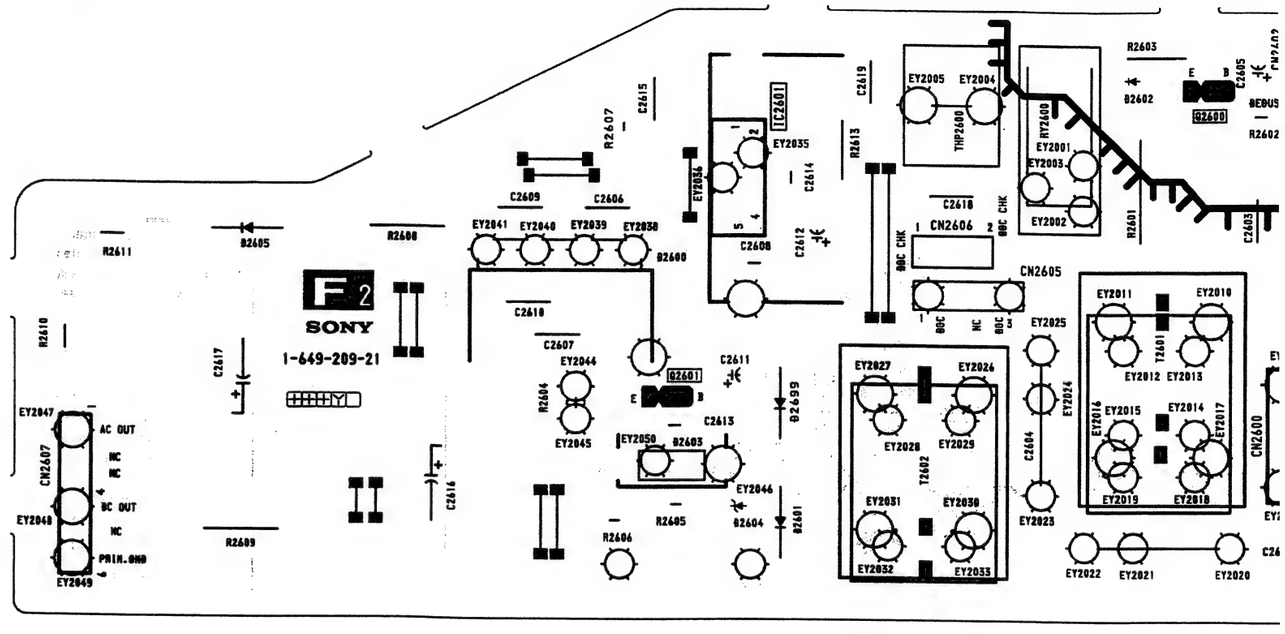

– H2 Board –

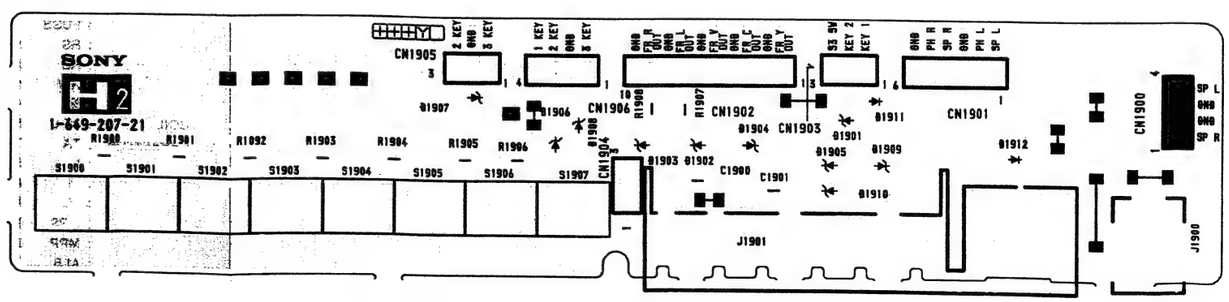

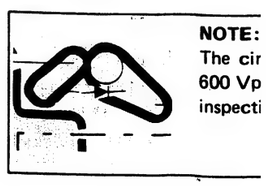

NOTE:
The cir
600 Vp
inspecti

• D BOARD

IC		DIODE	
IC303	F – 3	D601	B – 4
IC600	B – 1	D602	D – 4
IC601	B – 3	D604	C – 2
IC602	F – 1	D606	D – 4
IC804	F – 7	D607	C – 2
IC1501	E – 10	D608	E – 2
IC2504	E – 3	D609	D – 2
		D610	B – 3
		D611	D – 2
		D612	E – 1
		D613	A – 3
		D614	E – 1
		D615	F – 2
		D616	D – 4
		D617	A – 3
		D624	F – 2
		D801	C – 7
TRANSISTOR		D802	B – 9
		D803	F – 6
Q600	C – 4	D814	E – 9
Q601	E – 1	D815	B – 8
Q602	E – 1	D816	A – 9
Q603	E – 1	D824	E – 5
Q604	F – 3	D825	E – 5
Q803	F – 6	D1501	E – 9
Q1501	F – 9	D1502	F – 5
Q1502	E – 9	D1503	E – 10
Q1503	E – 9	D1504	F – 9
Q1504	F – 9	D1505	F – 5
Q2501	F – 4	D1506	E – 9
Q2502	D – 5	D2506	D – 7
Q2503	E – 4	D2507	E – 7
Q2505	E – 4	D2508	D – 6
Q2591	D – 6	D2509	E – 3
		D2510	B – 5
		D2511	C – 5
		D2512	F – 4
		D2515	F – 4
		D2524	F – 3
		D2526	F – 1
		D2527	F – 1

– D Board –

D [H/V OUT]

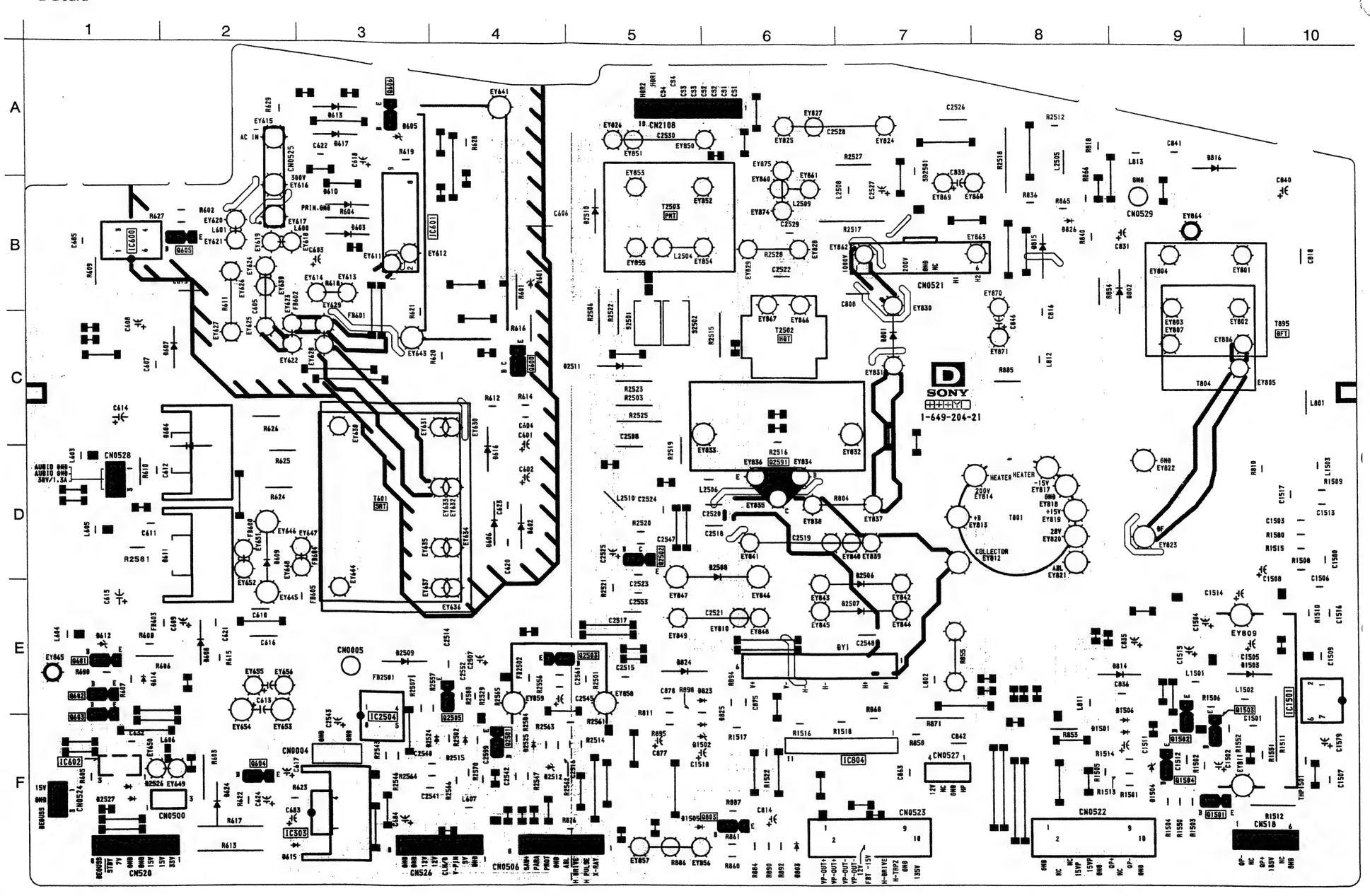

ed as left contains high voltage of over
ust be paid to prevent an electric shock in
ring.

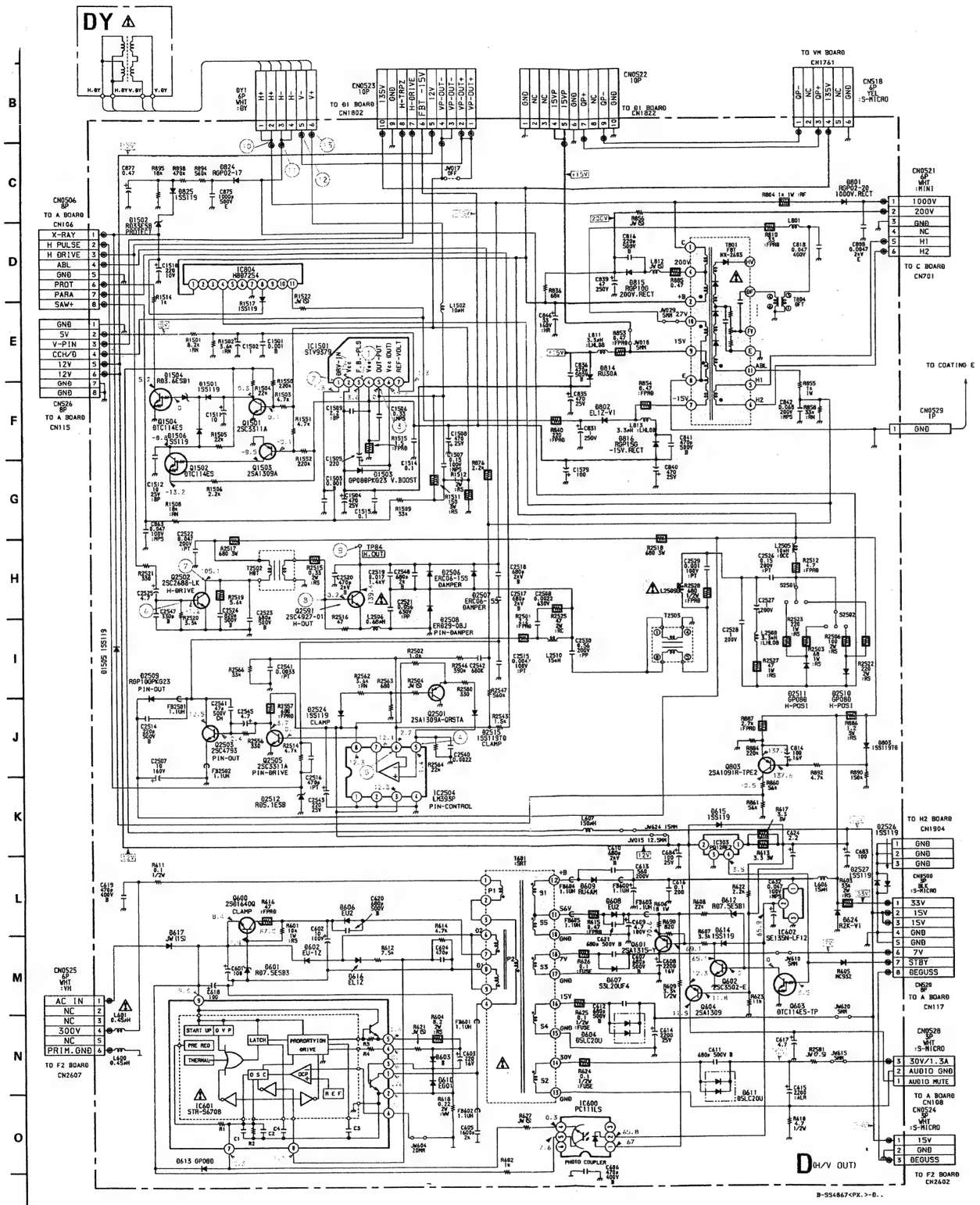

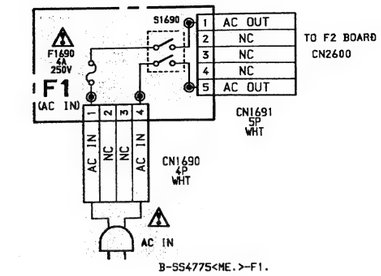

• D BOARD WAVEFORMS

① 2.0 Vp-p (V)	② 0.5 Vp-p (V)	③ 60 Vp-p (V)	④ 1.6 Vp-p (H)
⑤ 0.3 Vp-p (V)	⑥ 3.0 Vp-p (H)	⑦ 170 Vp-p (H)	⑧ 18 Vp-p (H)
⑨ 970 Vp-p (H)	⑩ 970 Vp-p (H)	⑪ 160 Vp-p (H)	⑫ 100 Vp-p (V)
⑬ 65 Vp-p (V)			

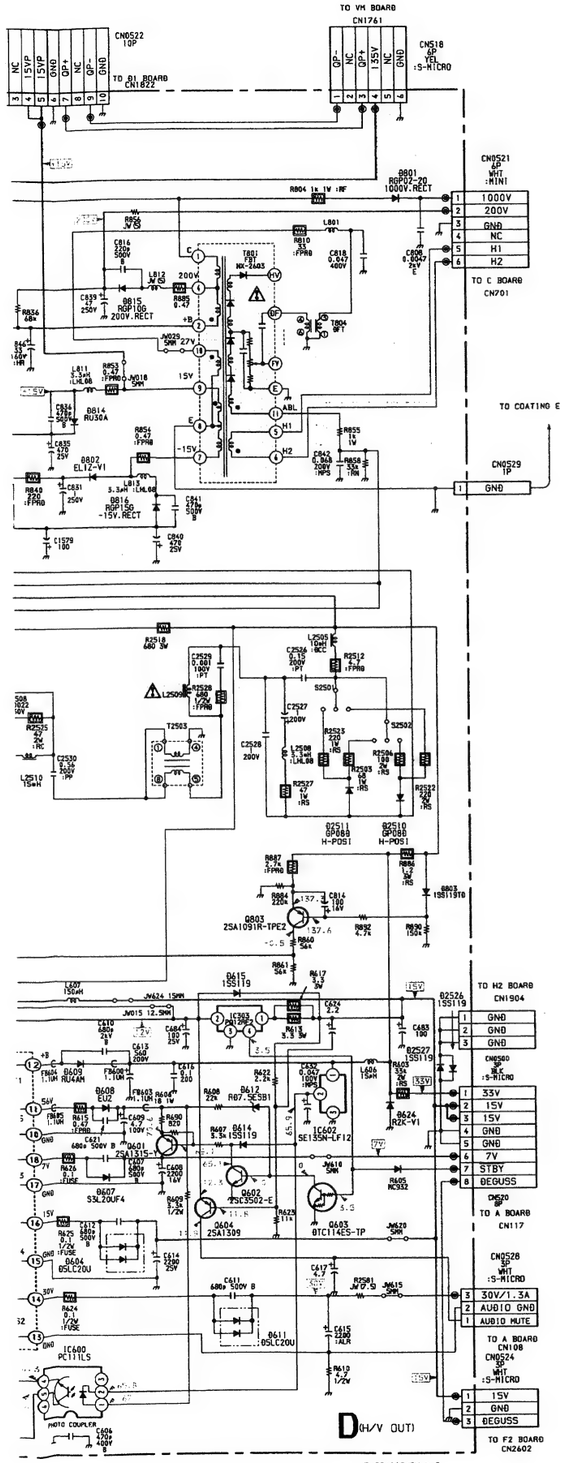

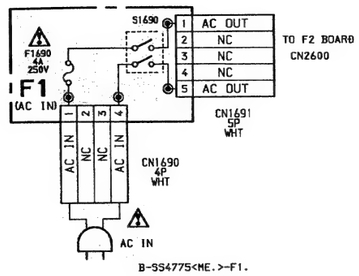

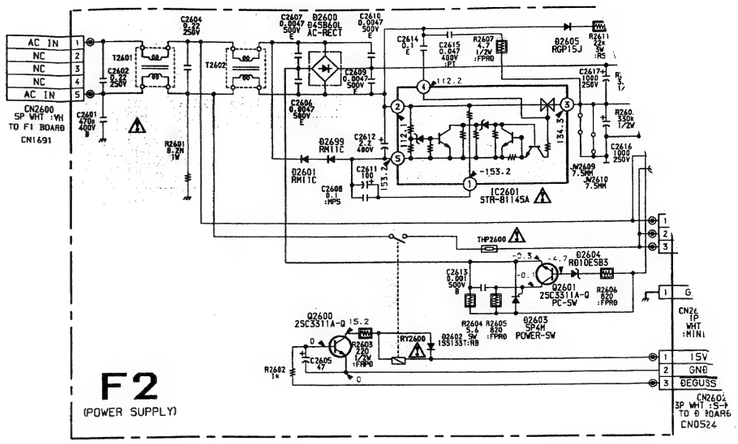

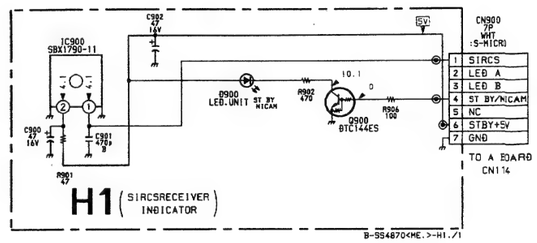

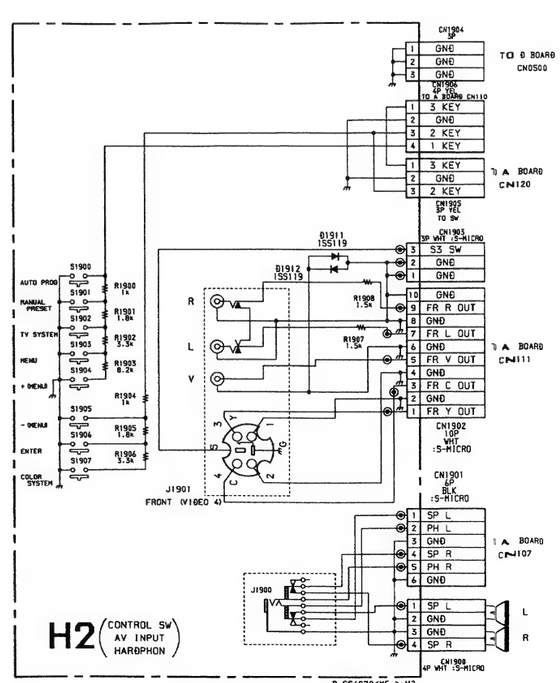

• D BOARD WAVEFORMS

1 2.0 Vp-p (V)	2 0.5 Vp-p (V)	3 60 Vp-p (V)	4 1.6 Vp-p (H)
5 0.3 Vp-p (V)	6 3.0 Vp-p (H)	7 170 Vp-p (H)	8 18 Vp-p (H)
9 970 Vp-p (H)	10 970 Vp-p (H)	11 160 Vp-p (H)	12 100 Vp-p (V)
13 65 Vp-p (V)			

iagram of A Board

AVEFORMS

1 5 Vp-p (H)	2 2.0 Vp-p (H)	3 PAL SECAM NTSC4.43 2.0 Vp-p (H)	3 NTSC3.58 1.75 Vp-p (H)
2.25 Vp-p (H)	5 2.25 Vp-p (H)	6 2.0 Vp-p	7 PAL SECAM NTSC4.43 2.0 Vp-p (H)
7 NTSC3.58 1.75 Vp-p (H)	8 1.2 Vp-p (H)	9 PAL SECAM NTSC4.43 1.1 Vp-p (H)	9 NTSC3.58 0.8 Vp-p (H)
10 1.2 Vp-p (H)	11 0.8 Vp-p (H)	12 0.9 Vp-p (H)	13 0.8 Vp-p (H)
14 0.9 Vp-p (H)	15 1.6 Vp-p (H)	16 1.3 Vp-p	17 3.2 Vp-p (H)
18 3.2 Vp-p (H)	19 3.2 Vp-p (H)		

A Board IC201 CXA1545AS

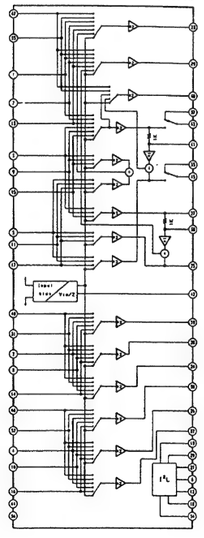

A Board IC301 TDA9145

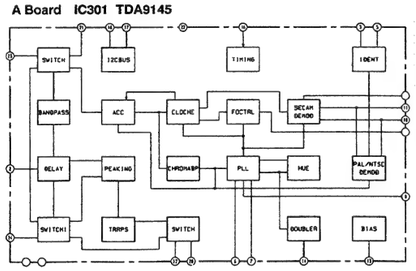

Schematic diagrams

D F1 F2

← H1 H2 boards

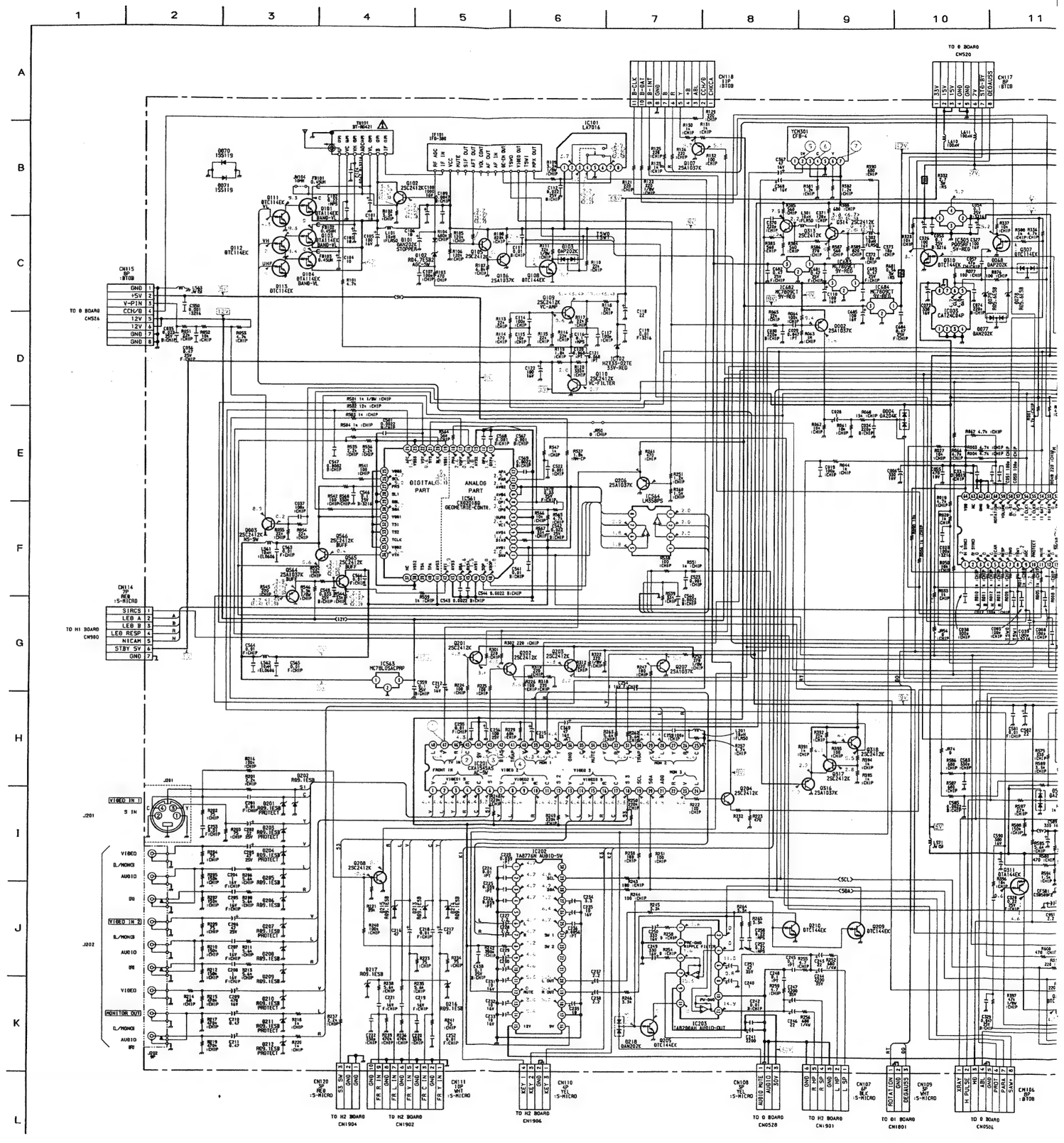

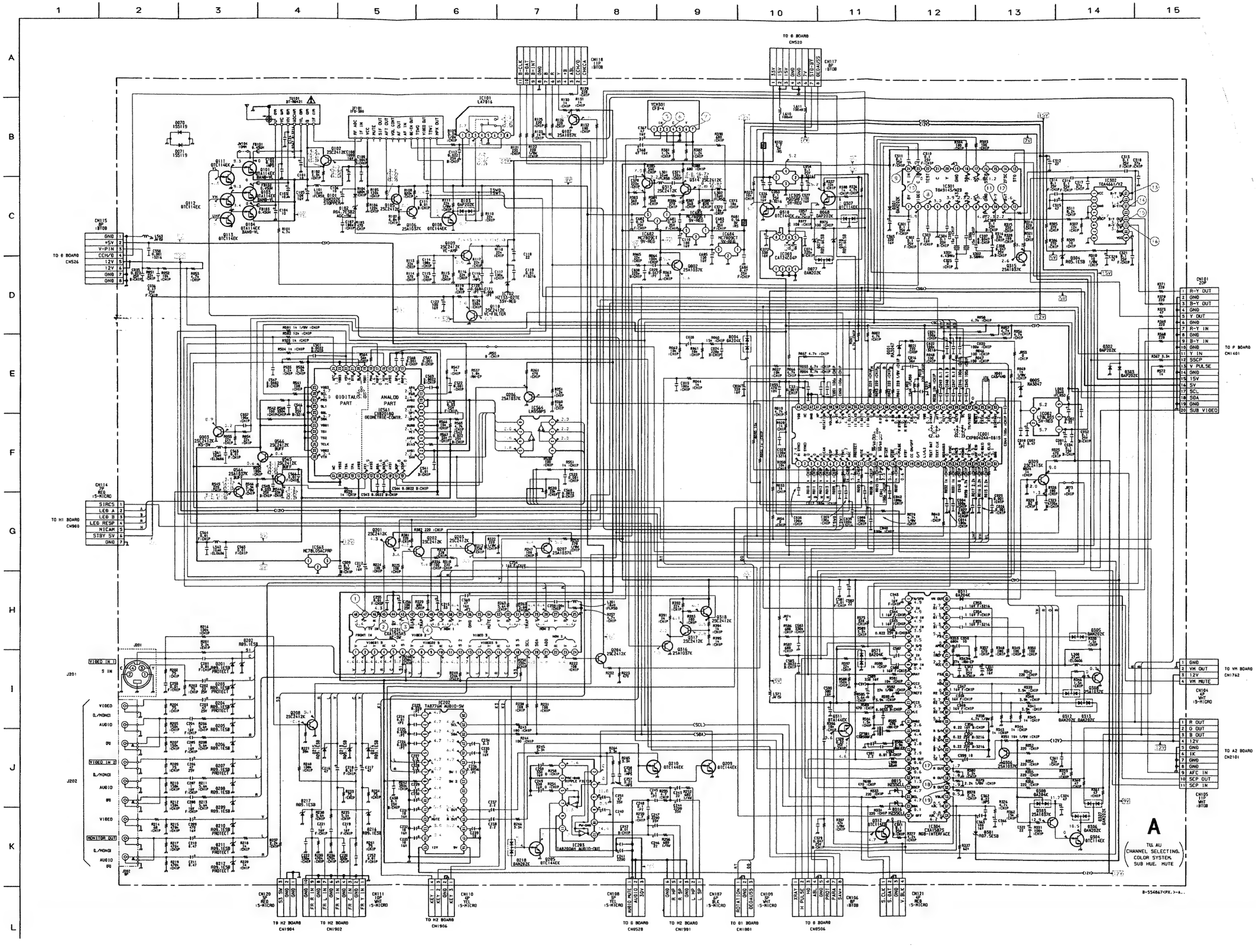

TO G BOARD CN520
TO G BOARD CN526
TO P BOARD CN1401
TO HI BOARD CN960
TO VM BOARD CN1762
TO A2 BOARD CN2101
TO H2 BOARD CN1904
TO H2 BOARD CN1902
TO H2 BOARD CN1906
TO G BOARD CN0528
TO H2 BOARD CN1901
TO G1 BOARD CN1801
TO G BOARD CN0506
DIGITALS PART
ANALOG PART
A
TU AU
CHANNEL SELECTING,
COLOR SYSTEM,
SUB HUE, MUTE

A TU, AU, CHANNEL SELECTION, COLOR SYSTEM, SUB HUE, MUTE

A Board IC304 CXA1587S

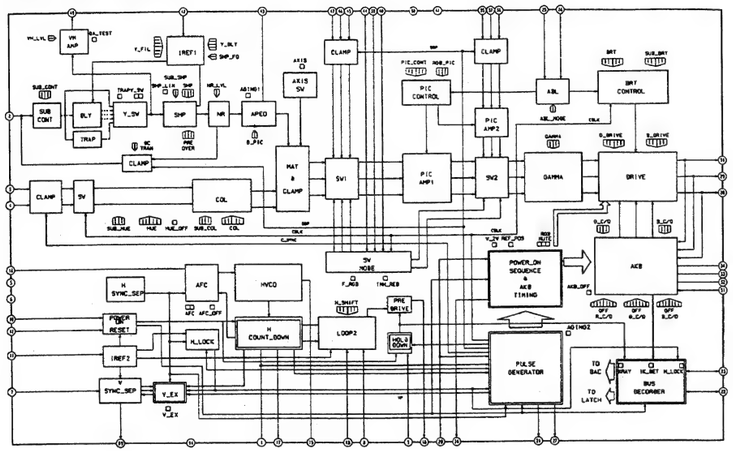

• **A BOARD**

IC		Q104	E – 9	Q312	D – 1	D204	C – 9	IF BLOCK	
IC001	B – 2	Q105	E – 6	Q313	B – 9	D205	B – 9	IF101	D – 6
IC002	C – 3	Q106	E – 6	Q314	A – 9	D206	B – 9		
IC003	C – 1	Q107	A – 9	Q315	E – 3	D207	C – 9	TUNER	
IC101	D – 6	Q108	D – 6	Q316	A – 9	D208	C – 9	TU101	E – 9
IC102	C – 8	Q109	D – 9	Q317	A – 9	D209	C – 9		
IC201	C – 9	Q110	D – 9	Q318	A – 8	D210	D – 9	CRYSTAL	
IC202	B – 6	Q111	D – 9	Q564	B – 5	D211	D – 9	X001	C – 3
IC203	D – 5	Q112	E – 9	Q565	B – 5	D212	D – 9	X301	E – 3
IC301	E – 3	Q113	E – 9	Q566	C – 5	D213	C – 8	X302	E – 2
IC302	E – 4	Q201	B – 9	DIODE		D214	C – 8		
IC304	D – 2	Q202	B – 8	D001	B – 2	D215	C – 8		
IC305	A – 2	Q203	B – 8	D004	C – 1	D216	C – 8		
IC561	C – 5	Q204	C – 7	D005	C – 2	D217	C – 8		
IC563	B – 5	Q205	D – 5	D015	E – 1	D218	D – 5		
IC564	B – 4	Q206	B – 9	D016	E – 1	D301	D – 3		
IC682	A – 7	Q207	B – 8	D068	C – 1	D302	E – 5		
IC683	B – 6	Q208	C – 7	D077	C – 1	D303	E – 2		
IC684	B – 6	Q209	D – 6	D078	C – 1	D304	E – 4		
		Q210	D – 5	D079	C – 1	D305	C – 2		
TRANSISTOR		Q303	C – 2	D101	E – 7	D306	D – 2		
Q002	E – 1	Q304	C – 2	D102	E – 6	D307	C – 2		
Q003	B – 3	Q306	E – 1	D103	D – 6	D308	C – 2		
Q101	D – 9	Q307	A – 1	D201	B – 9	D311	C – 3		
Q102	E – 8	Q308	D – 2	D202	B – 9	D312	C – 2		
Q103	E – 9	Q309	C – 2	D203	B – 9	D313	C – 2		
		Q310	A – 2			D381	D – 1		
		Q311	D – 1			D571	E – 2		

PRINTED WIRING BOARDS
– A Board –

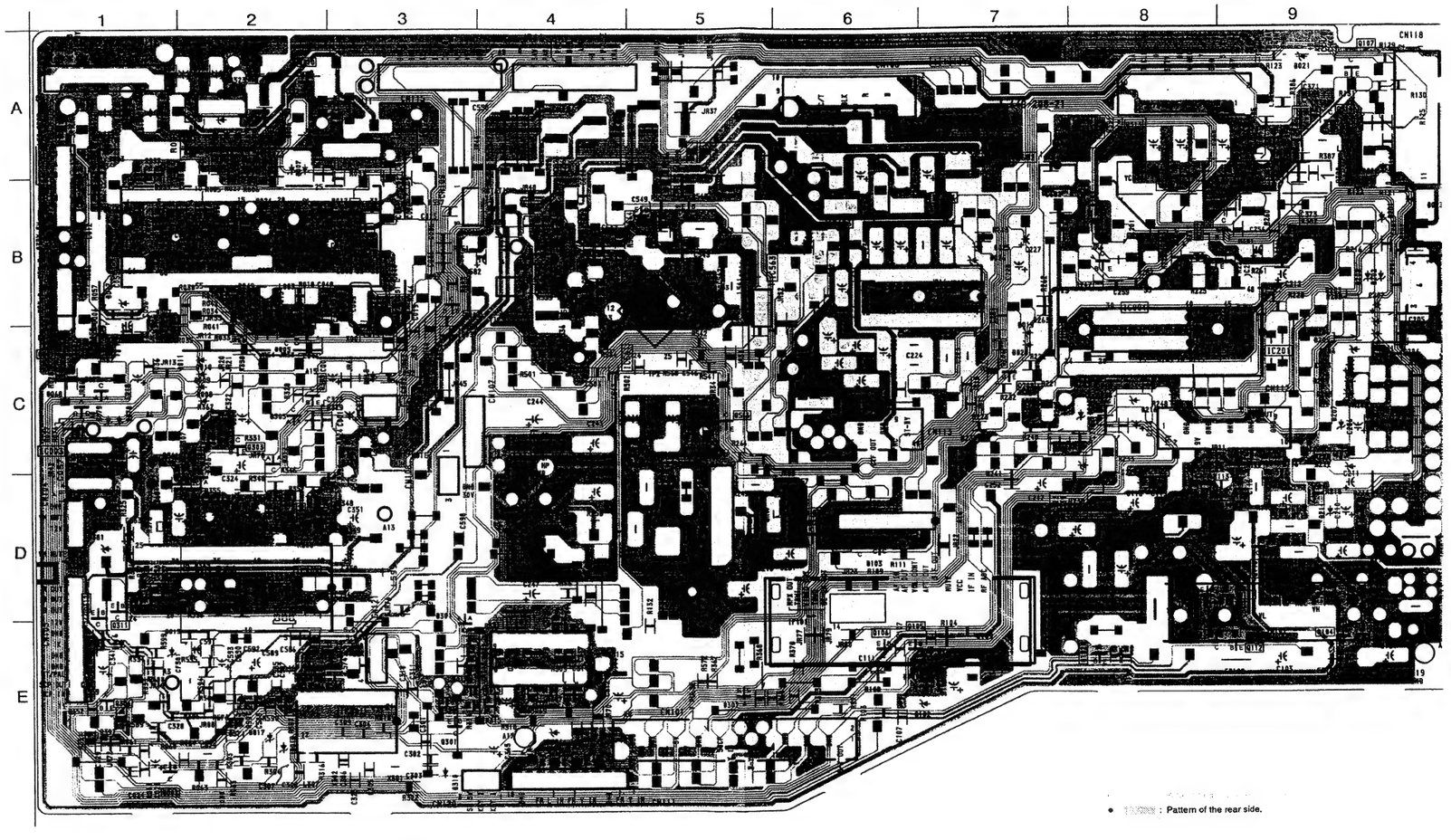

• : Pattern of the rear side.

KV-K29CF1
RM-845P

VM [VM OUT]

PRINTED WIRING BOARDS
– VM Board –

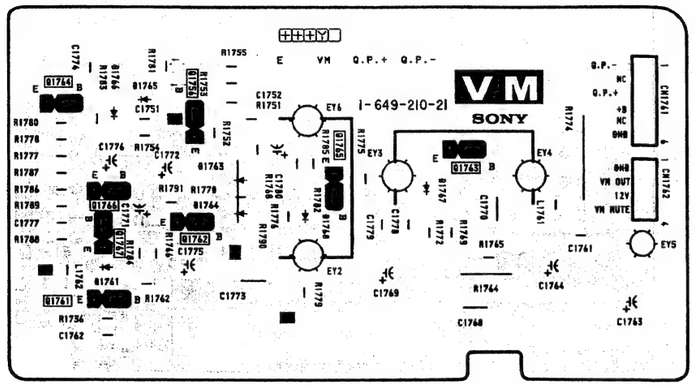

– A2 Board –

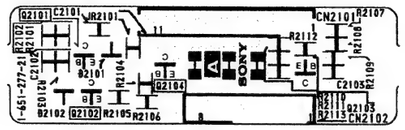

A2 [R, G, B IN/OUT, SCP IN/OUT]

P [P IN P]

– P Board –

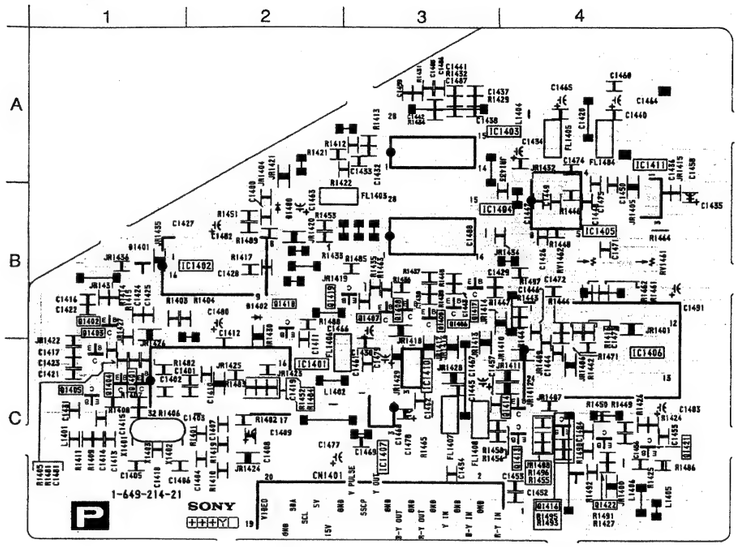

• **P BOARD**

IC			
IC1401	C – 2	Q1403	C – 1
IC1402	B – 2	Q1404	C – 1
IC1403	A – 3	Q1405	C – 1
IC1404	B – 3	Q1406	B – 3
IC1405	B – 4	Q1407	B – 3
IC1406	C – 4	Q1408	B – 3
IC1407	C – 3	Q1409	B – 3
IC1410	C – 3	Q1413	C – 4
IC1411	B – 4	Q1414	C – 4
TRANSISTOR		Q1416	C – 4
Q1401	C – 1	Q1417	B – 3
Q1402	B – 1	Q1418	B – 2
		Q1419	B – 3
		Q1420	
		Q1421	C – 4
		Q1422	C – 4

DIODE	
D1400	B – 2
D1401	B – 1
CRYSTAL	
X1401	C – 1
X1402	C – 1

1 2 3 4 5 6 7 8 9 10 11 12 13 14 15 16 17 18 19 20 21 22

C D E F G H I J K L M N O P

• P BOARD WAVEFORMS

① 2.0 Vp-p (H)	② PAL SECAM NYSC3.58 0.4 Vp-p (H)	② NTSC4.43 0.4 Vp-p (H)	③ PAL SECAM NYSC3.58 0.4 Vp-p (H)
③ NTSC4.43 0.4 Vp-p (H)	④ 1.5 Vp-p (H)	⑤ 1.3 Vp-p (H)	⑥ 1.5 Vp-p (H)
⑦ 1.3 Vp-p (H)			

P Board IC1401 TDA9160

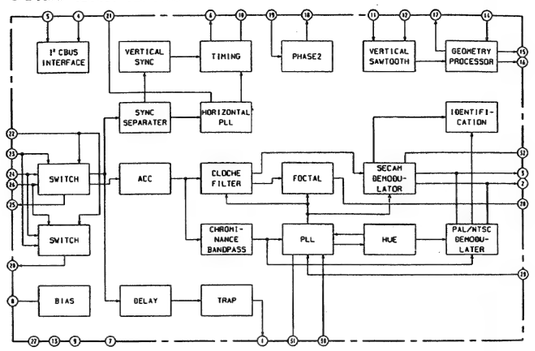

P Board IC1406 TDA8443A

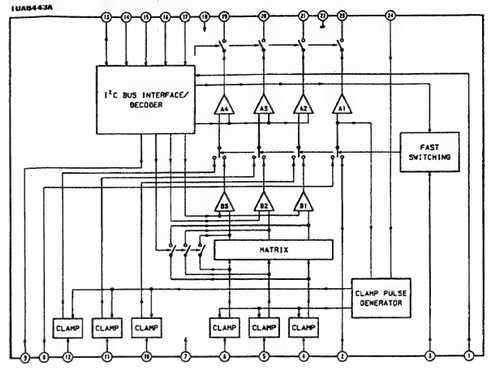

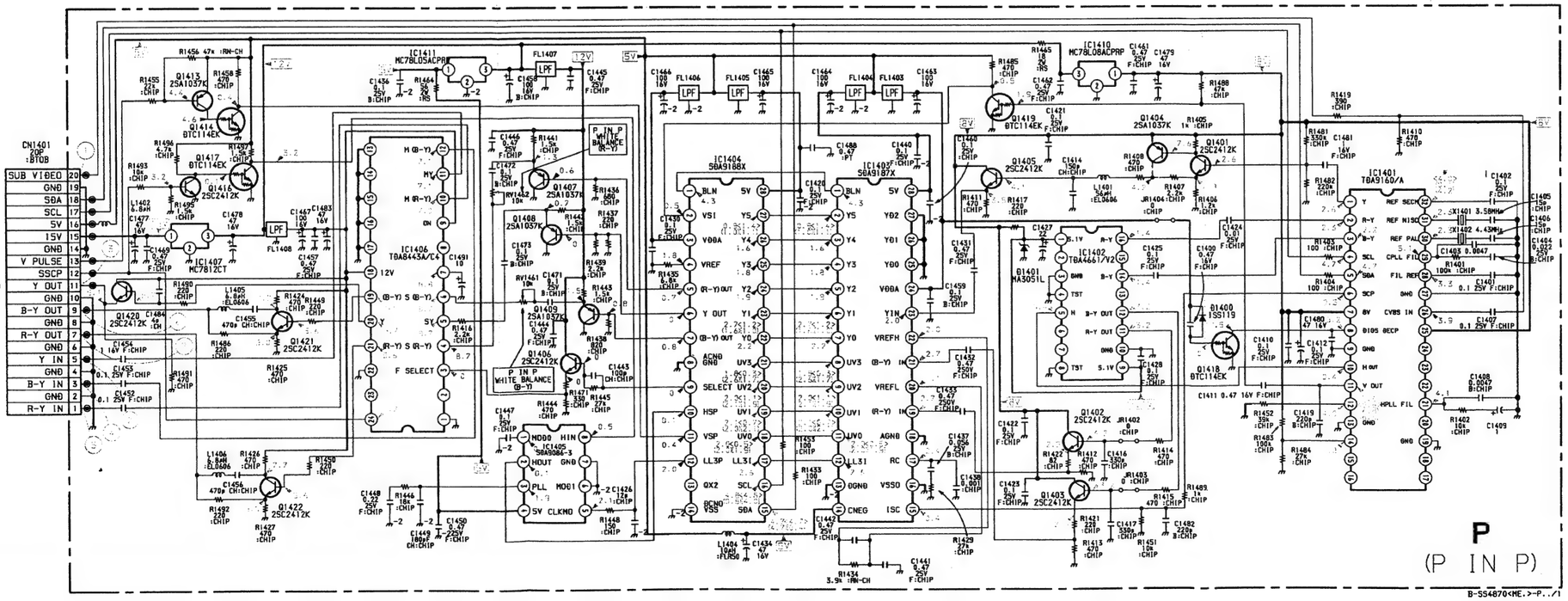

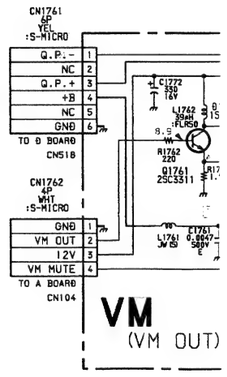

8 9 10 11 12 13 14 15 16 17 18 19 20 21 22 23 24 25 26 27 28

P Board IC1401 TDA9160

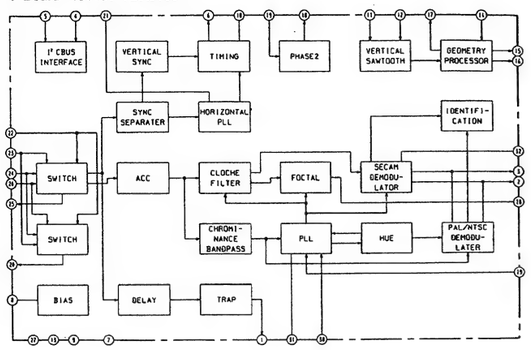

P Board IC1406 TDA8443A

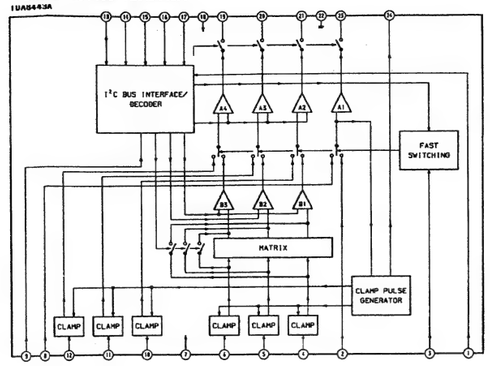

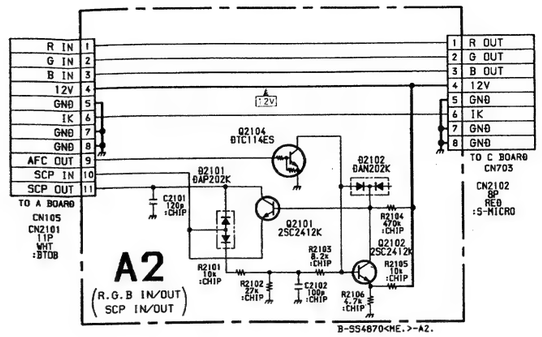

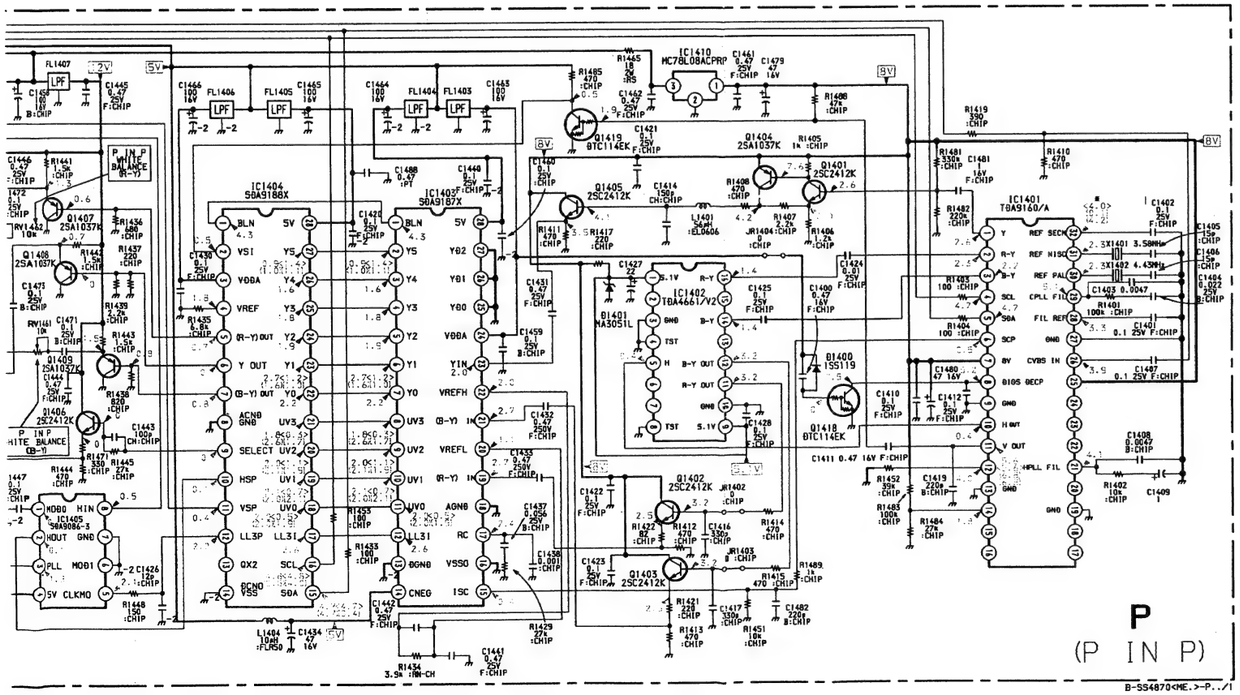

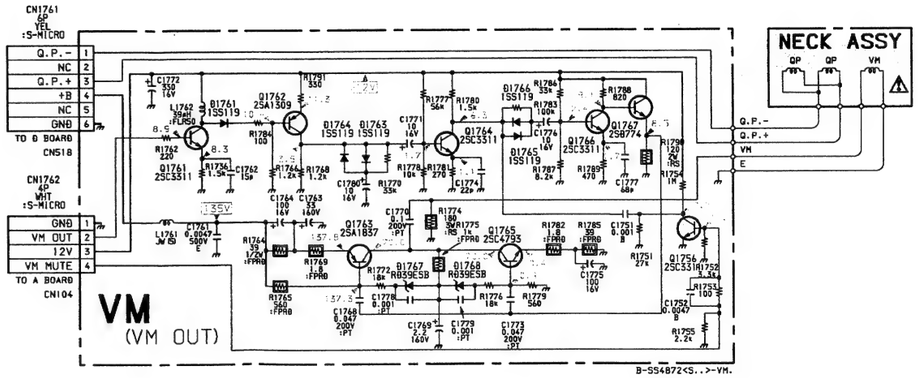

C H I J K L M N O P

2 3 4 5 6 7 8 9 10 11 12 13 14 15 16 17 18 19 20 21 22 23

F G H I J K L M N O P

• D1 BOARD WAVEFORMS

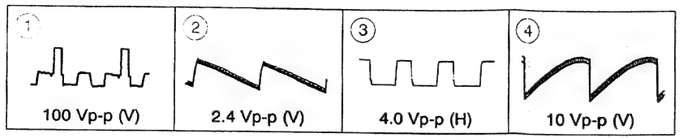

• C BOARD WAVEFORMS

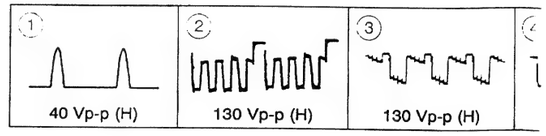

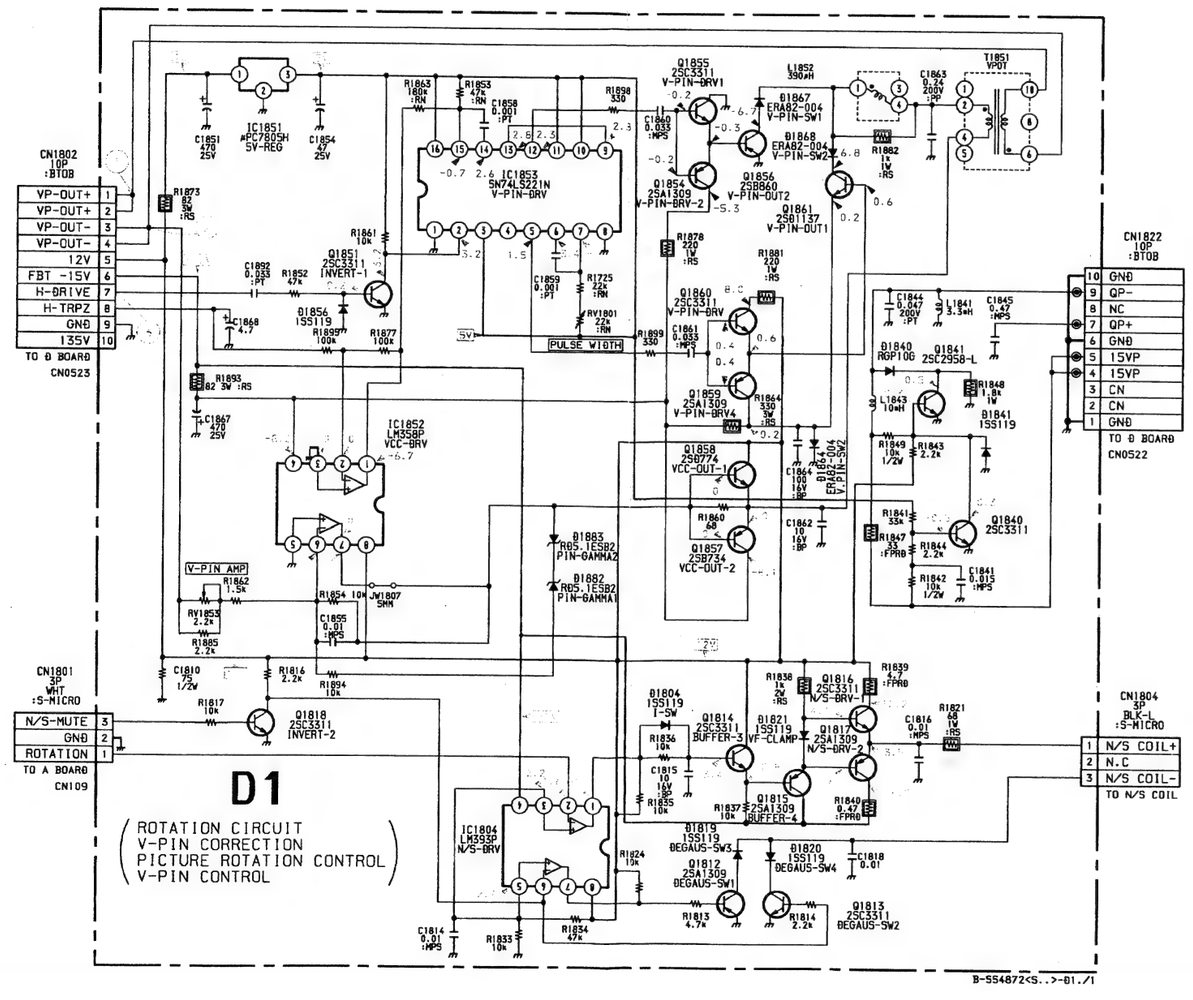

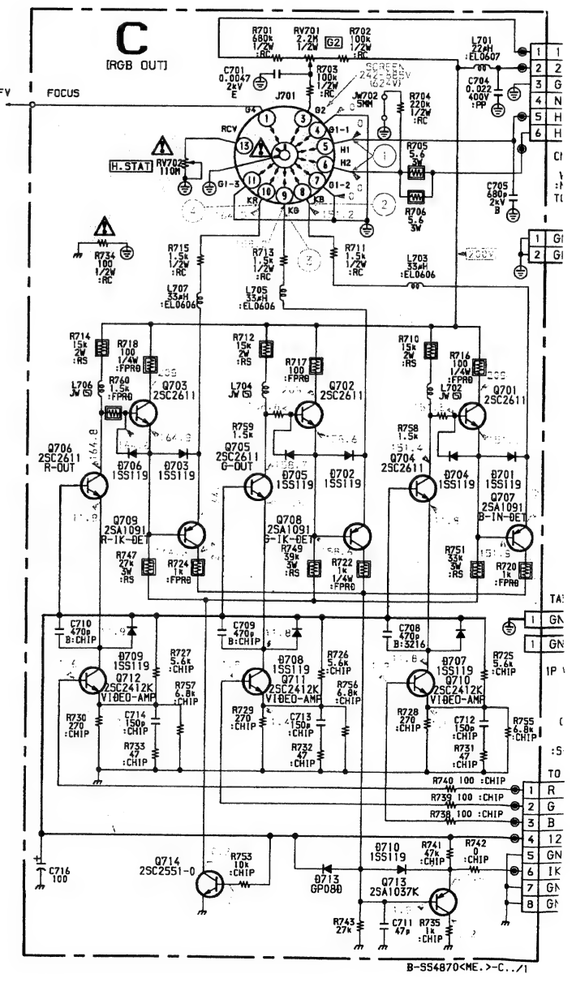

Schematic diagrams

A 2 P VM boards

10 Vp-p (V)

• C BOARD WAVEFORMS

①	②	③	④
40 Vp-p (H)	130 Vp-p (H)	130 Vp-p (H)	130 Vp-p (H)

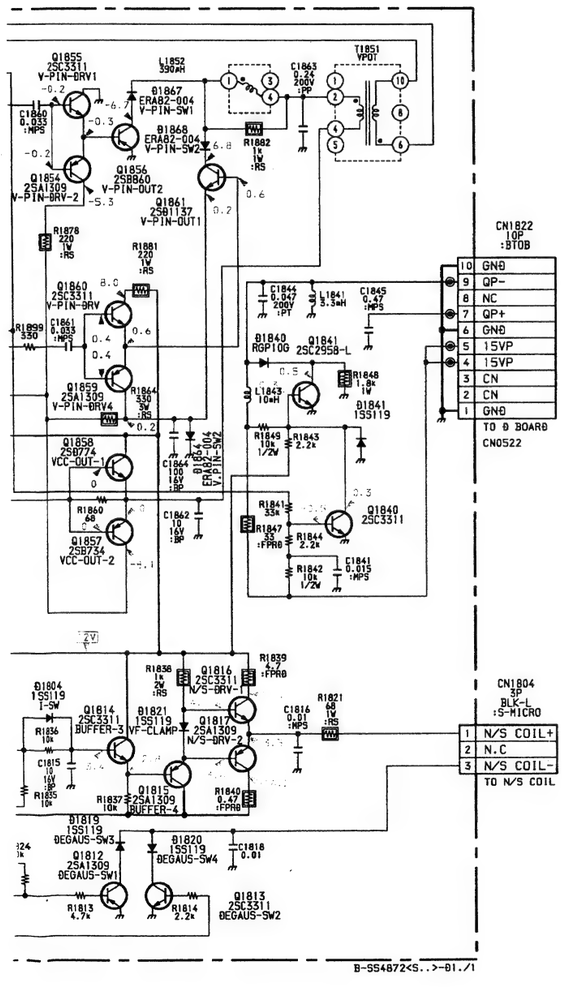

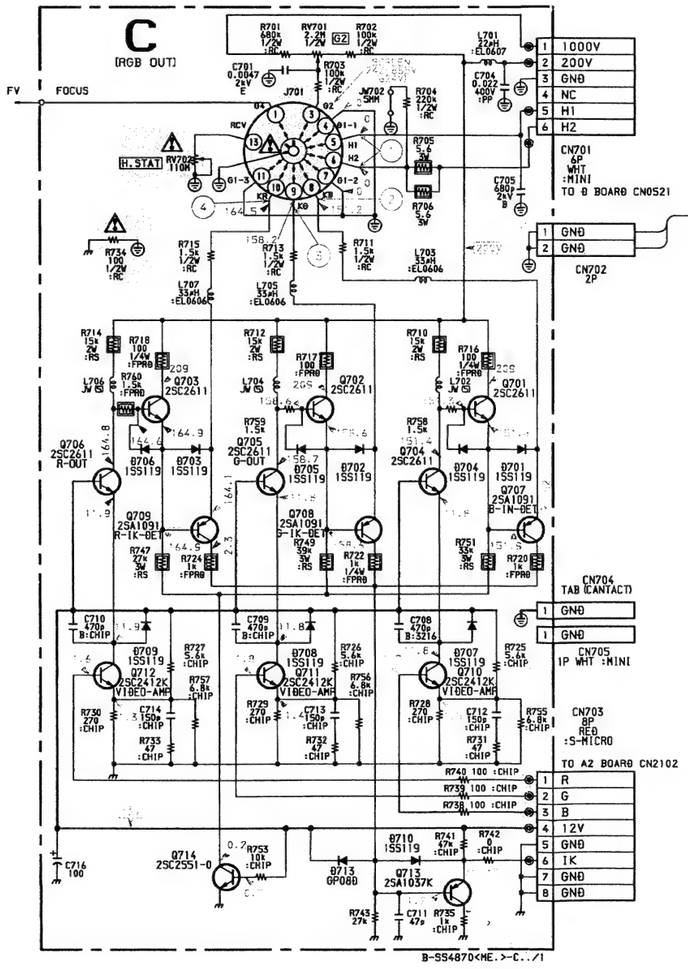

PRINTED WIRING BOARDS
– D1 Board –

D1 [ROTATION CIRCUIT, V-PIN CORRECTION, PICTURE ROTATION CONTROL, V-PIN CONTROL]

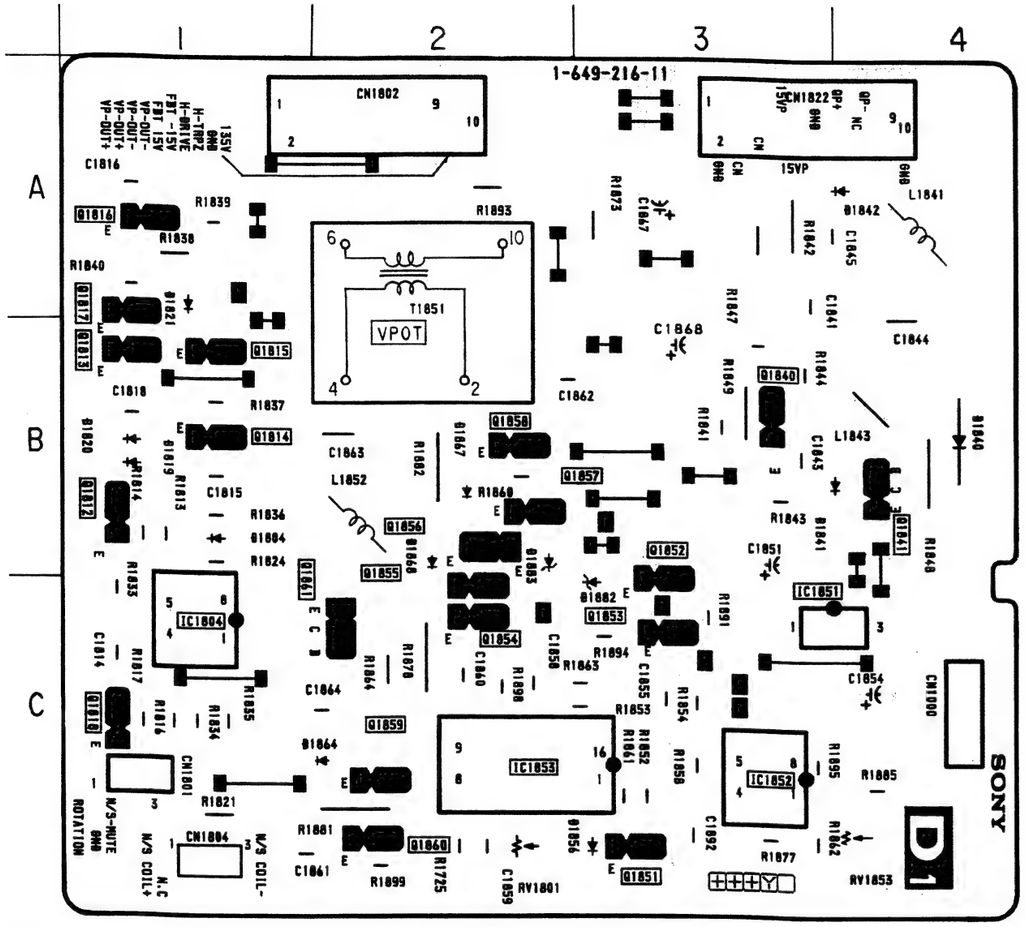

C [R, G, B OUT]

– C Board –

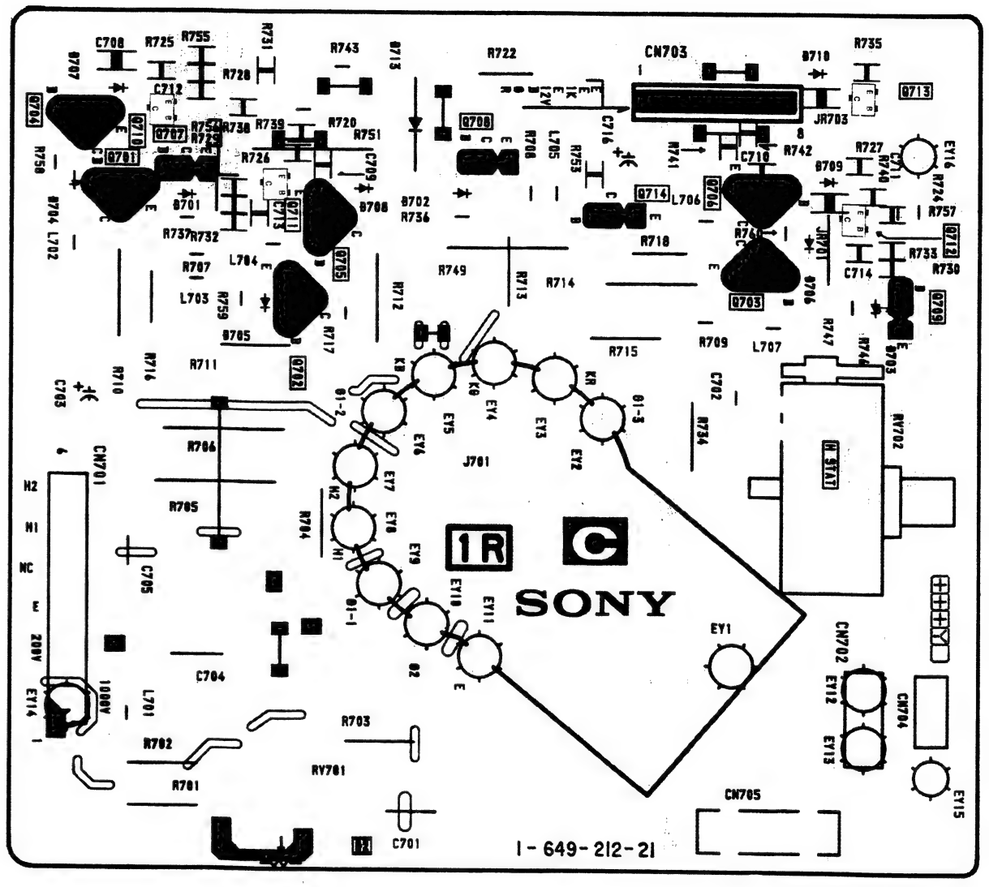

• **D1 BOARD**

IC					
IC1804	C – 1	Q1851	C – 3	D1856	C – 3
IC1851	C – 3	Q1854	C – 2	D1864	C – 2
IC1852	C – 3	Q1855	C – 2	D1867	B – 2
IC1853	C – 2	Q1856	B – 2	D1868	B – 2
		Q1857	B – 2	D1882	C – 3
TRANSISTOR		Q1858	B – 2	D1883	B – 2
		Q1859	C – 2	VARIABLE RESISTOR	
Q1812	B – 1	Q1860	C – 2		
Q1813	B – 1	Q1861	C – 2	RV1801	C – 2
Q1814	B – 1	DIODE		RV1853	C – 4
Q1815	B – 1	D1804	B – 1		
Q1816	A – 1	D1819	B – 1		
Q1817	A – 1	D1820	B – 1		
Q1818	C – 1	D1821	A – 1		
Q1840	B – 3	D1840	B – 4		
Q1841	B – 4	D1841	B – 3		

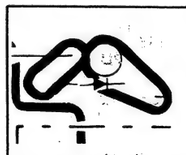

NOTE:
The circuit indicated as left contains high voltage of over 600 Vp-p. Care must be paid to prevent an electric shock in inspection or repairing.

5-5. SEMICONDUCTORS

CAT24C04P
LM358P
LM393P
SDA9086-3
μPC358C
μPC393C

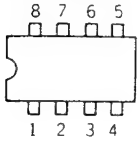

(Top view)

CXA1545AS
CXA1587S

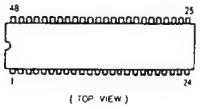

(TOP VIEW)

CXD2018Q

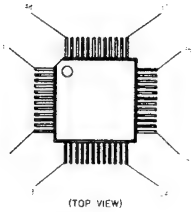

CXK5864BSP-10L
MAB8461P-W220
SAA5231/V7
SDA9187X
SDA9188X

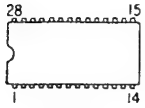

(Top view)

CXP80424
CXP80424-SV4652

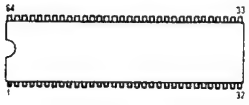

(Top view)

HZT33-02TE
μPC574J

LA7016

LM358PS

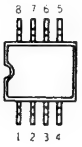

(TOP VIEW)

L78LR05D-MA

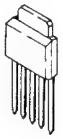

MC78L05ACPRP
NJM78L05A

MC7809CT
MC7812CT
NJM78M09FA
TA7805S
μPC7805H

PQ05RF1

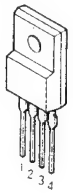

SAA5243P/T

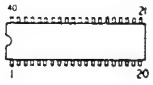

(Top view)

SE135N-LF12

1. VOUT
2. VIN
3. GND

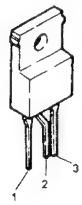

SN74LS221N
TDA4661/V2
TDA9821

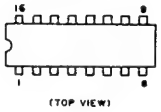

(TOP VIEW)

STR-81145A

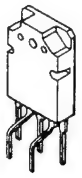

TA8200AH

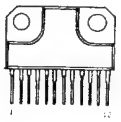

TA8776N

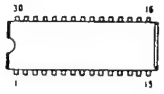

(Top view)

TDA8204
TDA8205

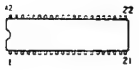

(Top view)

TDA8443A/C4
TDA9145
TDA9145/N2B

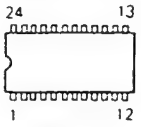

(Top view)

TDA9160A

(TOP VIEW)

TDA9840

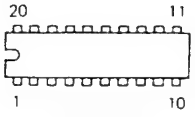

(Top view)

DTA114EK
DTA144EK
DTC114EK
DTC144EK
2SA1037K
2SA1162-G
2SC1623-L5L6
2SC2412K
2SC2412K-QR
2SC2413K
2SC2413KQ

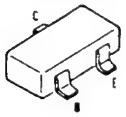

DTC114ES
DTC144ES

2SA1091-O
2SC2551-O

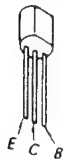

2SA1175-HFE
2SA1309A
2SC2785-HFE
2SC3311A

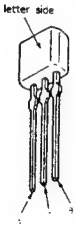

2SA1315-Y

2SA1837

2SB734-34
2SC2958-L
2SD774-34

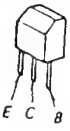

2SB858-C
2SB860
2SD2012
2SD2061-EF

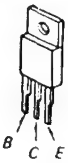

2SC2611
2SC2688-LK
2SC3502-E
2SC3601-E

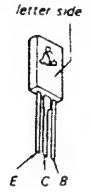

2SC3298B-O
2SC4793
2SD1137

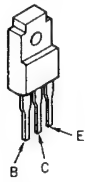

2SC4927-01

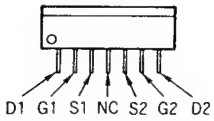

DAN202K

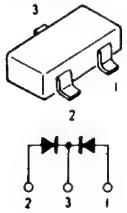

DAP202K

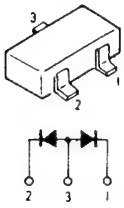

DA204K

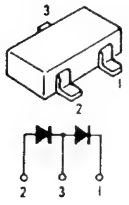

D4SB60L

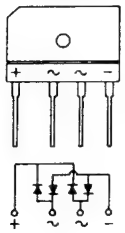

EGP20G
EG01
EL-1Z
EU-1Z
EU-2
GP08D
RGP15G
RGP15J

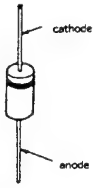

ERA82-004
ERA85-009
HZS5CLL-TD
RD10ES-B3
RD3.6ES-B1
RD33ES-B2
RD39ES-B
RD39ES-B2
RD5.1ES-B
RD5.1ES-B1
RD5.1ES-B2
RD5.6ES-B
RD7.5ES-B
RD7.5ES-B1
RD7.5ES-B2
RD7.5ES-B3
RD9.1ES-B
RD9.1ESL
1SS119
1SS133

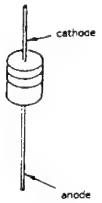

ERC06-15S
RGP02-20EL-6394

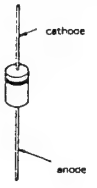

ERD29-08J
RGP02-17
RGP02-17EL-6433
RU4AM
RU4DS

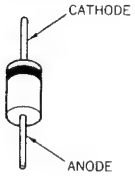

5P4M
5P6M

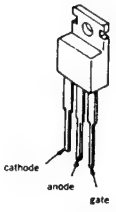

GP08
U05G

MA3047
RD13M-B2
RD3.6M-B2
RD4.7M-B2
RD5.6M-B3
RD6.8M-B1

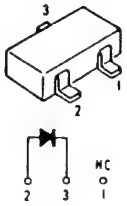

MA3051L-TX

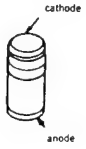

PC111LS
PC111YS

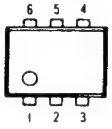

RM11C

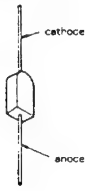

6-1. CHASSIS

●: BVTP3 × 12 7-685-648-79
■: BVTP4 × 16 7-685-663-79

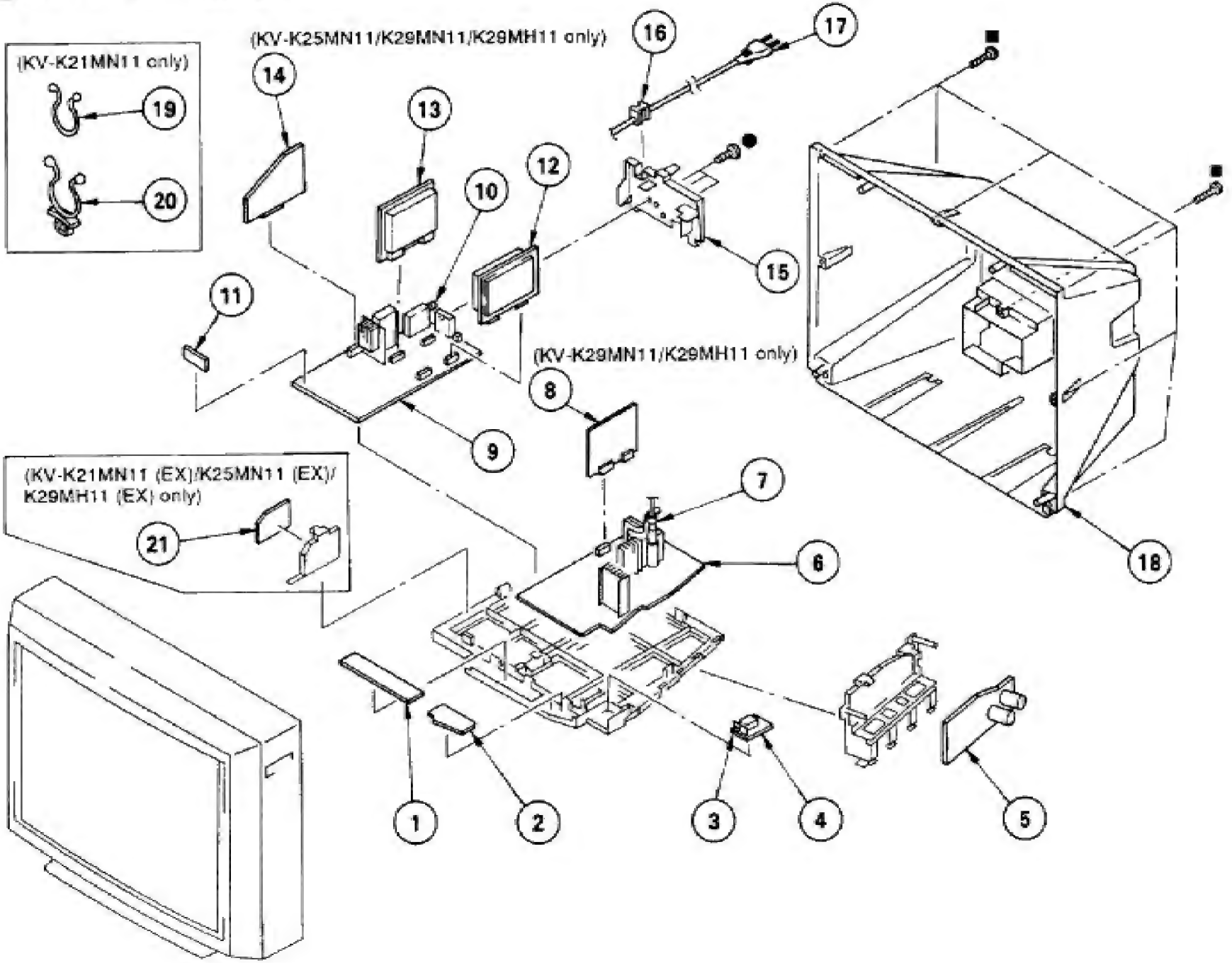

6-2. PICTURE TUBE

●: BVTP3 × 12 7-685-648-79
▲: BVTP4 × 12 7-685-661-14
■: BVTP4 × 16 7-685-663-79

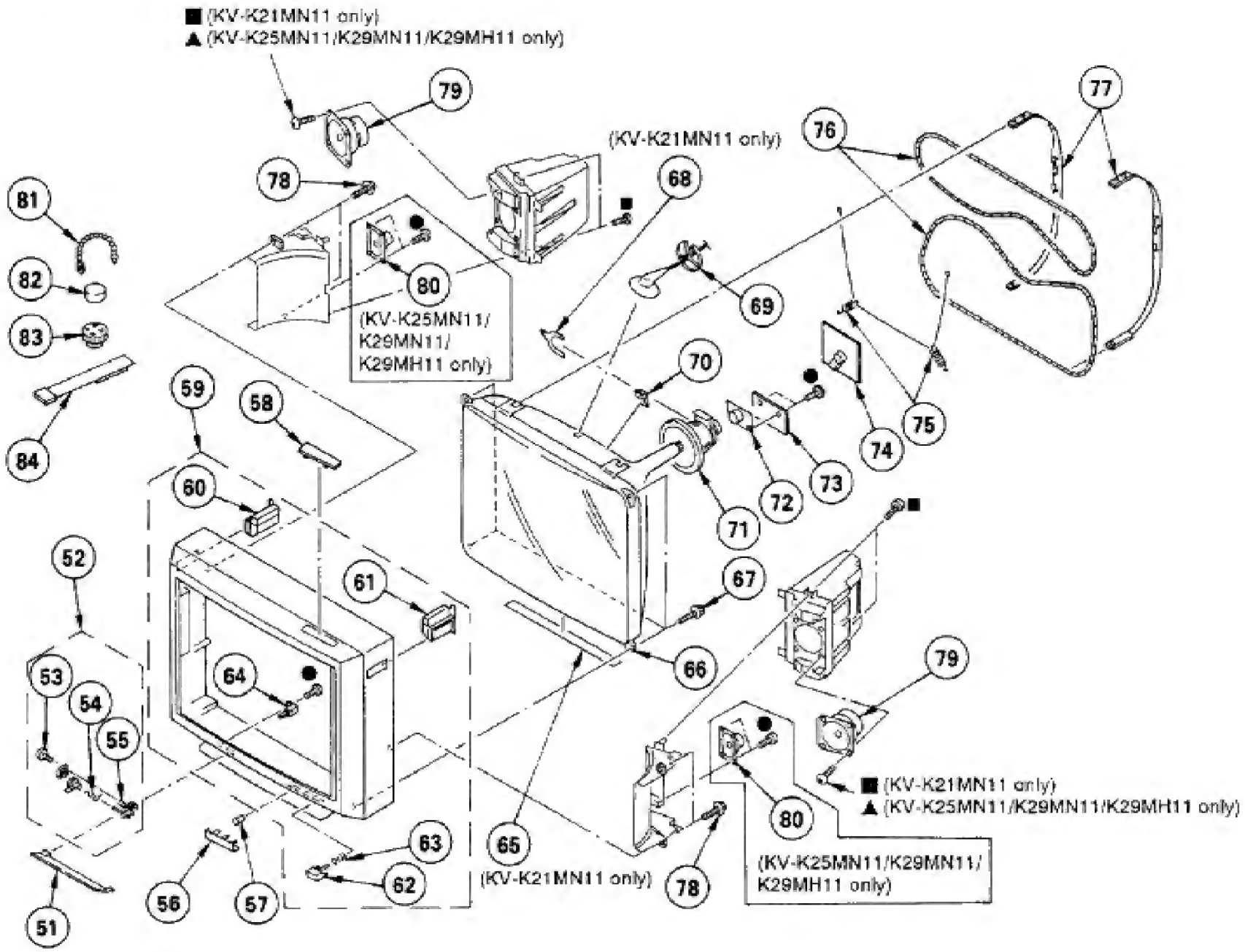

SONY

SERVICE MANUAL

G3F CHASSIS

MODEL	COMMANDER	DEST.	CHASSIS NO.
KV-K21MN11	RM-845T	ME	SCC-G37B-A
		EX	SCC-G50A-A
KV-K25MN11	RM-845P	ME	SCC-G37A-A
			(Serial No. 1,002,051 and later)
		EX	SCC-G50B-A

MODEL	COMMANDER	DEST.	CHASSIS NO.
KV-K29MH11	RM-845	HK	SCC-G43A-A
			(Serial No. 1,025,772 and later)
KV-K29MN11	RM-845P	GE	SCC-G44A-A
			(Serial No. 1,021,151 and later)

SUPPLEMENT-4

SUBJECT : 1. CHANGE OF F2 BOARD
2. CHANGE OF IC601 ON D BOARD

File this supplement with the service manual.

Note:

- All capacitors are in μF unless otherwise noted. pF: μμF 50 WV or less are not indicated except for electrolytic and tantalums.
- All resistors are in ohms.
  kΩ =1000Ω, MΩ =1000KΩ
- Indication of resistance, which does not have one for rating electrical power, is as follows.

  Pitch: 5 mm
  Rating electrical power ¼ W (CHIP: 1/10W)

- : nonflammable resistor.
- △ : internal component.
- : panel designation, or adjustment for repair.
- All variable and adjustable resistors have characteristic curve B, unless otherwise noted.
- Readings are taken with a color-bar signal input.
  no mark : PAL
  〈 〉: SECAM
  ( ) : NTSC 3.58
  《 》: NTSC 4.43
- Readings are taken with a 10 MΩ digital multimeter.
- Voltage are dc with respect to ground unless otherwise noted.
- Voltage variations may be noted due to normal production tolerances.
- All voltages are in V.
- * : Can not be measured.
- Circled numbers are waveform reference.

- : B + bus.
- : B − bus.
- : signal path.

Note: The components identified by shading and mark ⚠ are critical for safety. Replace only with part number specified.

Reference information

RESISTOR	: RN	METAL FILM
	: RC	SOLID
	: FPRD	NONFLAMMABLE CARBON
	: FUSE	NONFLAMMABLE FUSIBLE
	: RS	NONFLAMMABLE METAL OXIDE
	: RB	NONFLAMMABLE CEMENT
	: RW	NONFLAMMABLE WIREWOUND
	: ※	ADJUSTMENT RESISTOR
COIL	: LF-8L	MICRO INDUCTOR
CAPACITOR	: TA	TANTALUM
	: PS	STYROL
	: PP	POLYPROPYLENE
	: PT	MYLAR
	: MPS	METALIZED POLYESTER
	: MPP	METALIZED POLYPROPYLENE
	: ALB	BIPOLAR
	: ALT	HIGH TEMPERATURE
	: ALR	HIGH RIPPLE

MICROFILM

SONY

SERVICE MANUAL

G3F CHASSIS

MODEL	COMMANDER	DEST.	CHASSIS NO.
KV-K21MN11	RM-845T	ME	SCC-G37B-A
		EX	SCC-G50A-A
KV-K25MN11	RM-845P	ME	SCC-G37A-A
		EX	SCC-G50B-A

MODEL	COMMANDER	DEST.	CHASSIS NO.
KV-K29MH11	RM-845	HK	SCC-G43A-A
	(Serial No. 1,026,272 and later)		
	(Serial No. 1,426,272 and later)		
KV-K29MN11	RM-845P	GE	SCC-G44A-A
	(Serial No. 1,020,451 and later)		
	(Serial No. 1,023,851 and later)		

SUPPLEMENT-6

SUBJECT 1 : CHANGE OF PICTURE TUBE
2 : CHANGE OF COMPONENT VALUE ON VM AND D BOARDS

File this supplement with the Service Manual.

INTRODUCTION:

- On KV-K29MH11/KV-K29MN11 listed above shows 2 lines of serial numbers. The serial numbers on the first line are the sets with the new CRTs. Those on the second line are the sets with the new VM boards.

	PART NO.	DESCRIPTION
⚠	8-733-866-05	PICTURE TUBE (KV-K29MN11 GE only)
⚠	8-733-867-05	PICTURE TUBE (KV-K29MH11 HK only)

PARTS CHANGE : VM BOARD

REF. NO.	PARTS NO.	DESCRIPTION				REMARK
C1751	1-102-107-00	CERAMIC	120PF	10%	50V	
C1752	not mount					
D1765	not mount					
D1766	not mount					
JW213	1-249-393-11	CARBON	10	5%	1/4W	
Q1767	8-729-142-86	TRANSISTOR 2SC3733				
R1774	1-215-912-11	METAL OXIDE	150	5%	3W	F
R1753	1-249-421-11	CARBON	2.2K	5%	1/4W	
R1783	1-535-303-00	LEAD, JUMPER (5.0MM)				
R1788	1-249-417-11	CARBON	1.0K	5%	1/4W	

PARTS CHANGE : D BOARD

REF. NO.	PARTS NO.	DESCRIPTION				REMARK
C2519	1-136-611-11	FILM	16000PF	3%	1.4KV	
C2548	1-161-754-00	CERAMIC	1000PF	10%	3KV	

MICROFILM

SONY
SERVICE MANUAL

G3F CHASSIS

MODEL	COMMANDER	DEST.	CHASSIS NO.
KV-K21MN11	RM-845T	ME	SCC-G37B-A
KV-K21MN11	RM-845T	EX	SCC-G50A-A
KV-K25MN11	RM-845P	ME	SCC-G37A-A
KV-K25MN11	RM-845P	EX	SCC-G50B-A
KV-K29MH11	RM-845	HK	SCC-G43A-A
KV-K29MN11	RM-845P	GE	SCC-G44A-A

CORRECTION- 2

SUBJECT: PART CHANGE

File this correction with the Service manual.

INTRODUCTION: Corrected the FBT part no. (KV-21MN11 only)

☛:Indicates corrected portion

SECTION 6. EXPLODED VIEWS

6-1.CHASSIS (See page 70)

REF NO.	PART NO.	DESCRIPTION
7	⚠ [illegible]	TRANSFORMER, FLYBACK ([illegible] only)

ELECTRICAL PARTS LIST

D BOARD (See page 90)

REF NO.	PART NO.	DESCRIPTION
T801	⚠ [illegible]	TRANSFORMER, FLYBACK ([illegible] only)

MICROFILM

※ Please file according to model size. ..... ■

21 | 25 | 29

Sony Corporation
Display Company
Quality Engineering Dept.

9-965-527-92

English
97DE02156-1
Printed in JAPAN

© 1997.4

SONY
SERVICE MANUAL

G3F CHASSIS

MODEL	COMMANDER	DEST.	CHASSIS NO.
KV-K21MN11	RM-845T	ME	SCC-G37B-A
		EX	SCC-G50A-A
KV-K25MN11	RM-845P	ME	SCC-G37A-A
		EX	SCC-G50B-A

MODEL	COMMANDER	DEST.	CHASSIS NO.
KV-K29MH11	RM-845	HK	SCC-G43A-A
	(Serial No. 1,025,772 and later)		
KV-K29MN11	RM-845P	GE	SCC-G44A-A
	(Serial No. 1,019651 and later)		

SUPPLEMENT-5

SUBJECT KV-K29MH11, KV-K29MN11
1 : CHANGE OF PICTURE TUBE
2 : CHANGE OF D1 BOARD
3 : CHANGE OF NECK ASSY AND DY

File this supplement with the Service Manual.

INTRODUCTION:

- On KV-K29MH11/KV-K29MN11 the following new parts numbers are introduced to the models serial numbers listed above and later.

	PART NO.	DESCRIPTION
⚠	8-733-859-05	PICTURE TUBE
	A-1346-473-A	D1 BOARD COMPLETE
⚠	1-452-762-31	NECK ASSY PICTURE TUBE (NA294)
⚠	8-451-467-21	DEFLECTION YOKE (Y29GX2A)

Note on replacement of CRT:

- For those sets prior to the serial numbers listed above, be sure to use the picture tube : 8-733-854-05 for replacement.
- Especially on replacing CRTs of the following serial numbers sets, check if the label on the tube shows 9GB and if no tape is applied around the CRT neck of the Neck Assy. In this case, be sure to replace the Neck Assy with 1-452-509-12 at the same time as the CRT.

MODEL	DEST.	SERIAL NO.
KV-K29MH11	HK	1,025,703 to 1,025,771

MICROFILM

SONY®
SERVICE MANUAL

G3F CHASSIS

MODEL	COMMANDER	DEST.	CHASSIS NO.
KV-K21MN11	RM-845T	ME	SCC-G37B-A
KV-K21MN11	RM-845T	EX	SCC-G50A-A
KV-K25MN11	RM-845P	ME	SCC-G37A-A
KV-K25MN11	RM-845P	EX	SCC-G50B-A
KV-K29MH11	RM-845	HK	SCC-G43A-A
KV-K29MN11	RM-845P	GE	SCC-G44A-A

SUPPLEMENT- 7

SUBJECT: PART CHANGE

File this supplement with the Service manual.

INTRODUCTION: Change the CRT part no. (KV-K29MH11/K29MN11 only)

☛ :Indicates changed portion

SECTION 6. EXPLODED VIEWS

6-2.PICTURE TUBE (See page 71)

REF NO.	PART NO.	DESCRIPTION
66	⚠ 8-733-[illegible]-05	PICTURE TUBE (M68KZT71X)(KV-K29MH11)
	⚠ 8-733-[illegible]-05	PICTURE TUBE (M68KZT71X)(KV-K29MN11)

ELECTRICAL PARTS LIST

MISCELLANEOUS (See page 94)

REF NO.	PART NO.	DESCRIPTION
V001	⚠ 8-733-[illegible]-05	PICTURE TUBE (M68KZT71X)(KV-K29MH11)
	⚠ 8-733-[illegible]-05	PICTURE TUBE (M68KZT71X)(KV-K29MN11)

MICROFILM

※ Please file according to model size. .....

21 25 29

Sony Corporation
Display Company
Quality Engineering Dept.

9-965-527-87

English
97DE02156-1
Printed in JAPAN

© 1997.4